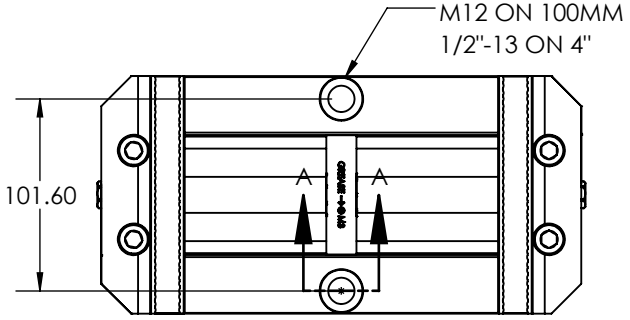

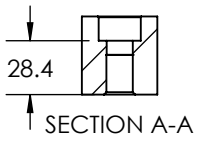

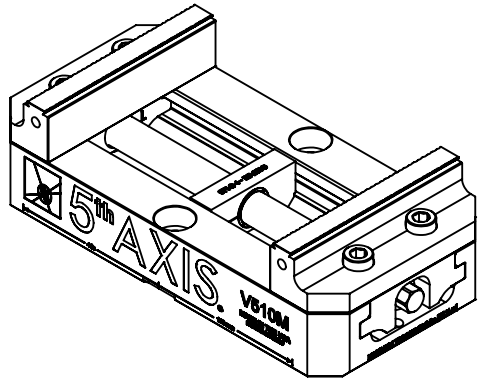

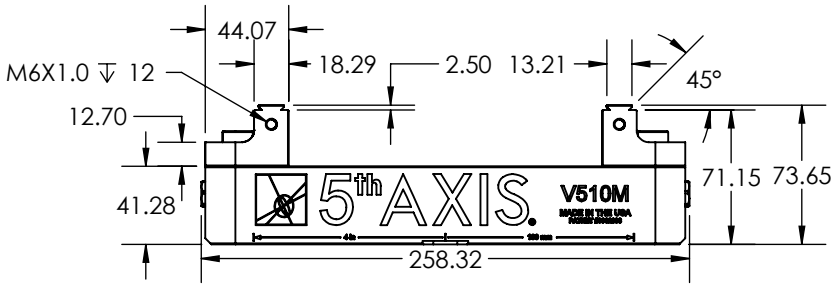

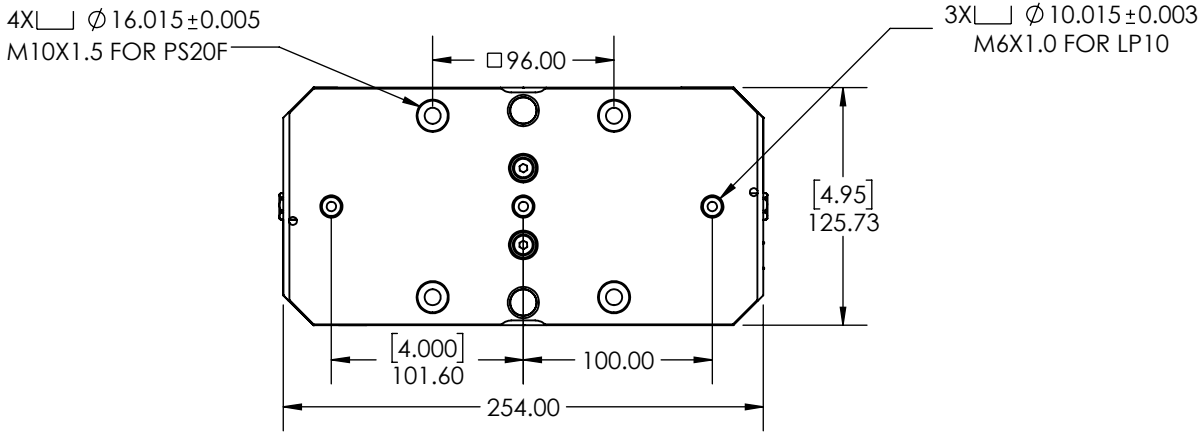

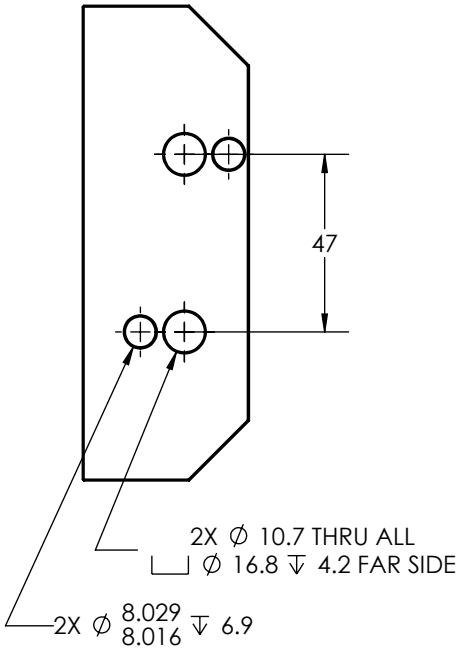

JAW MOUNTING

INCH	**TOLERANCES** UNLESS OTHERWISE SPECIFIED	**APPROVALS**	5th AXIS
DRAWN IN ACCORDANCE WITH ASME Y14.5-2009	X ± 0.1 .XX ± 0.01	DRAWN BY Y. RHEE 08/01/2019	WWW.5THAXIS.COM
PROPRIETARY AND CONFIDENTIAL	.X ± 0.05 .XXX ± 0.005	MANUFACTURING	7140 ENGINEER ROAD SAN DIEGO, CA 92111
THE INFORMATION CONTAINED IN THIS DRAWING IS THE SOLE PROPERTY OF FIFTH AXIS, INC. ANY REPRODUCTION IN PART OR AS A WHOLE WITHOUT THE WRITTEN PERMISSION OF FIFTH AXIS, INC. IS PROHIBITED.	ANGULAR ± 0.5°	QUALITY	P (858) 505-0432 F (858) 505-9344
	THIRD ANGLE PROJECTION	FINAL	DESCRIPTION: Self-Centering Vise, 125mm X 250mm
			SIZE A · PART NO. V510M · REV A
			DO NOT SCALE DRAWING · SCALE 1:1 · WEIGHT: · SHEET 1 OF 1