TESTit clamping force measuring device

TEST modules for O.D. clamping. Technical data

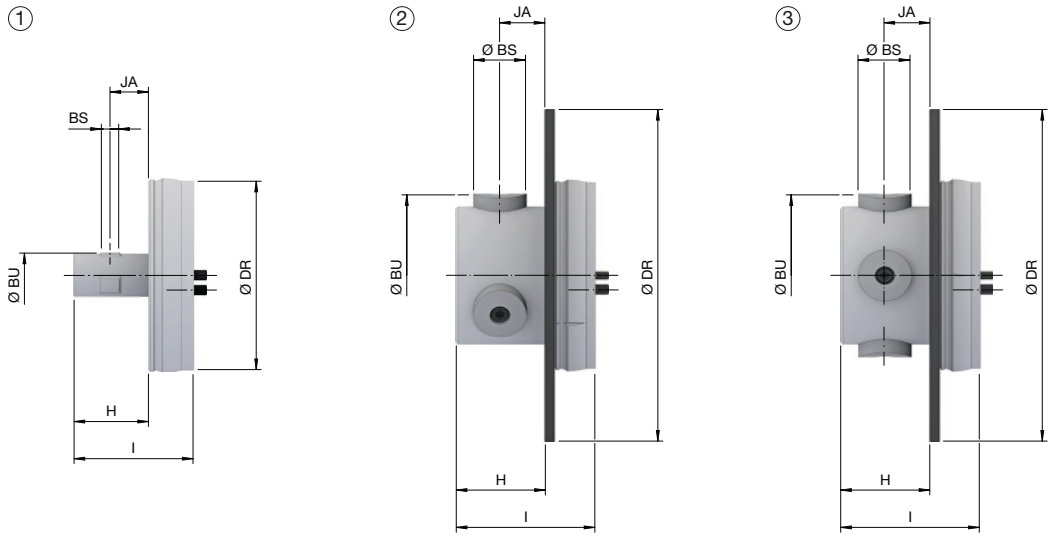

Size		AS18	AS32	AS65	AS65-4
Clamping Ø [mm]	BU	18	32	65	
Type		1	2		3
Measuring range attribute [4 measuring points] [kN]					0 – 150
Measuring range attribute [3 measuring points] [kN]		0 – 75	0 – 140	0 – 225	
Measuring range centric [2 measuring points] [kN]			0 – 90	0 – 150	
Measurement accuracy of the final value ± [%]		≤ 3			
RPM n max. [1/min.]		10000	8000	6000	
Total length [mm]	l	48		56	
Outer Ø [mm]	DR	76	134		
Length [mm]	H	30	28	36	
Length 2 [mm]	BS	7	14	21	
Distance [mm]	JA	15,5	14,5	18,5	
In stock		✔	✔	✔	✔
Order no.		10014843	10014845	10014846	10014847

Scope of delivery

- TEST module incl. one set of measuring bolts in the specified clamping diameter [except for AS18]
- Service Pass
- Storage case

Plug gauge

Product	Figure	Suitable for	Clamping Ø [mm]	Application	In stock	Order no.
Plug gauge		AS32	32	For 2-point clamping force measurement	✔	10015181
				For 3-point clamping force measurement	✔	10015184
			42		-	10015185
			52		-	10015187
			65		✔	10015188
		AS65		For 3-point and 2-point clamping force measurement	✔	10015190
			80		-	10015191
			100		✔	10015193
			120		✔	10015195
		AS65-4	65	For 4-point and 2-point clamping force measurement	✔	10015197
			120		✔	10015198

TEST modules for I.D. clamping. Technical data

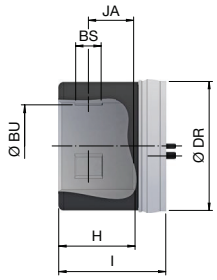

Size		IS28	IS50	IS70
Clamping Ø [mm]	BU	**28**	**50**	**70**
Measuring range attribute [3 measuring points] [kN]		0 – 100	0 – 200	0 – 240
Measurement accuracy of the final value ± [%]		≤ 5		
RPM n max. [1/min.]		7000		6000
Total length [mm]	l	53	63	68
Outer Ø [mm]	DR	76		95,5
Length [mm]	H	35	45	50
Length 2 [mm]	BS	15		19
Distance [mm]	JA	21,5	27,5	30,5
In stock		✔	✔	✔
Order no.		10014840	10014841	10014842

Scope of delivery

- TEST module
- Service Pass
- Storage case

TEST module for draw-in force of hollow tapered shanks. Technical data

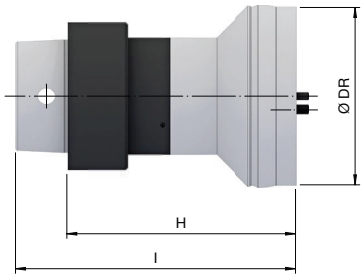

Size		HSK40	HSK50	HSK63	HSK100
Max. measuring range axial [kN]		**0 – 20**		**0 – 50**	**0 – 90**
Measurement accuracy of the final value ± [%]		≤ 3			
Total length [mm]	l	105	115,5	120	188,5
Outer Ø [mm]	DR	76			100
Length [mm]	H	91	98		138,5
In stock		-	-	✔	-
Order no.		10015203	10015204	10014848	10015205

Scope of delivery

- TEST module
- Service Pass
- Storage case