Bevelling machine with variable angle and automatic feed
DOUBLE-SIDED BEVELLER UZ 50 TRIUMPH MANIPULATOR 3D.

3D adaptive system

Operating and maintenance manual

CE

A copy of this manual is delivered with every bevelling machine.
All rights reserved..
No part of this manual can be reproduced without the prior consent granted by the N.KO company.

Contents

1 General information

Introduction 3
Tests 3
Guarantee 3
Identification data 4
Reference standards 5

2 Safety

Safety recommendations 6
Safety labels 6
Operator's qualification and protection 7
Safety devices 7
Residual risks 8

3 Technical specifications

Machine description 9
Technical data 9
Noise level 11
Working environment conditions 11

4 Installation

Transport and lifting 12
Location and connection 12
Checks before commissioning 13
Scrapping and disposal 13

5 Use

Correct use 14
Description of controls 15
Preliminary adjustment 17
Cut-off and machining setting 21

6 Maintenance and adjustment

Recommendations 26
Head and cutting blades disassembly 27
Oil replacement 29
Drive belt replacement 31
Version ASP 32

7 Spare parts

How to order spare parts 33
Wear-and-tear parts 33
Eletric connection drawing 33-35
Spare parts drawing diagram 36-54

General information

1.1 Introduction

We thank you for buying one of our machines and hope you will be fully satisfied with it.

This manual contains all instructions for installation, adjustment, operation and maintenance of the machine.
DOUBLE-SIDED BEVELLER UZ 50 TRIUMPH MANIPULATOR 3D (hereinafter UZ50)
in conformity with valid safety standards.

Information and data in this manual are subject to change as a result of further improvement of our machines. If you find any difference, please contact N.KO to remove any doubts.

Never perform any operations on the machine until you have read and understood the instructions in the manual. Most of the accidents occurring at the workplace are caused by non-observance of instructions and recommendations contained in the manual.

Graphic symbols are used in this manual to highlight important information regarding safety and operation of the machine.

Warning:
Important information for the operator's personal safety.

Important:
Instruction which must be followed for the correct machine operation.

1.2 Tests

The bevelling machine is tested in our test room.
During this test, the correct function of the electric system and bevelling of plates and sections of different types and sizes is verified.

1.3 Guarantee

The manufacturer grants the guarantee for the bevelling system UZ 50 Triumph covering defects of

material and workmanship of the goods for the period of 12 months from the date of its delivery.

For the perfect function of the goods and materials used, the guarantee is granted for the period of 12 months from the date of its delivery.

The Seller undertakes to remove all contingent defects covered by this guarantee, free of charge and without undue delay, so that the Purchaser can use the goods properly. If the Purchaser sets up a claim regarding the liability for defects which are not covered by the guarantee, s/he shall reimburse the related costs to the Seller.

The guarantee period is suspended from the day on which the Purchaser notifies the Seller of the occurrence of a defect covered by the guarantee and sets up his/her claim regarding the liability for defects covered by the guarantee granted, for the period during which he cannot use the goods until the day when the Seller removes the defect.

The guarantee does not cover natural and common wear of the goods as well as defects resulting from incorrect use of the goods in contradiction with the training and documentation provided. Further, the guarantee does not cover defects caused by overloading of the goods as well as defects occurring after unqualified interference, repair or modification of the goods. Unqualified interference, repair or modification apply to any interference, repair or modification executed in contradiction to the training or documentation provided, or executed by a person other than the Seller or a person entrusted or approved by the Seller.

The claim regarding the liability for defects must be laid to the Seller without undue delay after the Purchaser has found the defect, until the end of the guarantee period at the latest, otherwise the claim expires.

To make a claim regarding the liability for defects on the basis of the guarantee granted, the Seller must present the guarantee certificate; otherwise the claim cannot be recognized to the Purchaser.

The Seller’s liability for defects covered by the guarantee does not arise if the defects were caused after the transfer of risks of damage to the goods by external factors. The external factors particularly include natural disasters, force majeure or third persons’ acts.

N.KO. considers the guarantee invalid in the event of:
- improper use of the machine;
- use in contradiction with national or international standards;
- incorrect installation;
- defective electric power supply;
- serious maintenance faults;
- unauthorized modifications or interventions;
- use of unoriginal or incorrect spare parts and accessories for the given model;
- partial of total infringement of the instructions;
- abnormal events, natural disasters, and others.

1.4 Identification data

The identification data of the bevelling machine are indicated on the aluminium CE label located at the top of the bearing box.

1.5 Reference standards (CE-Declaration of Conformity)

EC Declaration of Conformity

1. Publisher´s name statement: N.KO,spol. s r.o.
   Adress: Táborská 398//22
   293 01 Mladá Boleslav
   Czech republic
   Identification number: 26161109

2. Scope statement:
   Name: Bevelling machine
   Type: UZ50
   Producer: N.KO spol. s r.o.

3. Purpose of use: Bevelling machine with automatic feeding for bevel steel

4. The object of declaration described above is in conformity with the requirements of the following documents

Directive 2006/95/EC:	Electrical Equipment designed for use within certain voltage limits
Directive 2004/108/EC:	Electromagnetic compatibility
Directive 2006/42/EC:	Safety of machinery - Basic requirements
EN ISO 12100:	Safety of machinery – General principles for design
EN ISO 13857::	Safety of machinery – Safety distances to prevent hazard zones being reached by upper and lower limbs
EN 953 A1:	Safety of machinery – General requirements for the design and construction of fixed and movable guards
EN 60204-1:	Safety of machinery – Electrical equipment of machines
EN 61000-6-3:	Electromagnetic compatibility - Generic standards - Emissions - Residential, commercial and light-industrial environments

5. Information about accredited/ notified person:

Date and place of issue: 1.1.2012 Mlada Boleslav, Czech Republic

Name and title of authorized person: Mr. Milan Richtr – managing director

N.KO spol. s r.o.
Táborská 398, 293 01 Mladá Boleslav
IČO:26161109 DIČ:CZ26161109
Tel:326772001 fax:326774279
www.nko.cz

SAFETY

2.1 Safety recommendations

⚠ Warning:
Read carefully the following instructions to prevent work accidents and/or property damage.

- Never try to operate the machine until you have thoroughly familiarized yourself with the way it functions. If you still have doubts after having read this manual carefully and fully, please contact the N.KO company.

- Make sure that all the technical workers who are to use and maintain the machine have been fully familiarized with all safety recommendations.

- The machine can only be transported and installed by specialized workers in conformity with the instructions in this manual.

- Before starting the machine, the operator must check that all safety devices are functional and all safety covers are in place.

- Never use the machine for purposes other than those specified in the manual. Never process other products than those specified.

- Before using the machine for other purposes, contact the N.KO company to ask for permission.

- Voltage values used for supplying the machine are dangerous: see that all connections are fixed properly; never maintain the machine or change parts unless you have disconnected the power supply; never connect any branch lines to electric connections.

- Only replace defective parts with those recommended by the manufacturer. Never use any unoriginal parts.

- Never wear clothes or jewellery which may get caught by the moving parts. Protective clothing is recommended: footwear with anti-slip soles, ear protectors and protective goggles.

● Important:
If during the machine service life any defects occur which cannot be removed according to this manual, it is recommendable to contact the N.KO, company which will resolve the problem as soon as possible.

2.2 Safety labels

Safety labels are fixed on the bevelling machine to protect the operators.

Meaning of the labels:

This label is fixed on the electric panel of the bevelling machine and indicates presence of high voltage.

Do not remove this label from the machine.

2.3 Operator's qualification and protection

The employer is obliged to inform the operators on the safety standards; additionally, s/he must ensure their observance and see that the working area is sufficiently large and well illuminated.

The term "operator" designates a person who installs, operates, adjusts, maintains, cleans and repairs the machine.

⚠ Warning:
Before starting the work, the operators must be familiarized with the machine properties and must have read this manual.

⚠ Warning:
The operators must always:

1. See that all the safety covers are mounted and the safety devices are functional before starting the machine.
2. Avoid wearing clothes or jewellery which may get caught by the moving parts.
3. Wear the approved protective clothing, such as footwear with anti-slip soles, ear protectors and protective goggles.
4. Apply safety standards, see that they are observed at all times and, if in doubt, consult this manual again before taking any measures.
5. Contact the machine supplier if s/he unable to resolve the defects causing malfunction of the machine, if the defects concern to defective parts or irregular running.

Safety devices

The machine is equipped with safety covers to isolate the zones potentially dangerous for the operator. These covers are screwed on or together with the machine frame. They can be removed with suitable spanners. This operation may be necessary during certain maintenance activities.

⚠ Warning:
The cover can only be removed if the machine is stopped and the power supply plug removed from the socket. Never operate the machine without safety covers mounted.

The machine is equipped with a mushroom-like red emergency button which stops the machine immediately, suppressing all other operations (position B, Fig. 2.4.1).

This emergency button is used:

- in case of immediate danger or mechanical accident;
- for short interventions when the machine has already been stopped, to maintain the machine in this state.

Fig. 2.4.1

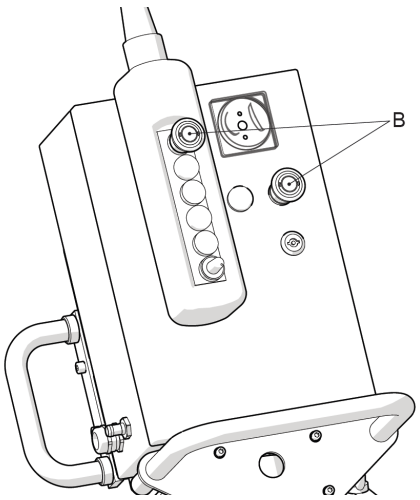

2.4 Residual risks

The machine has been designed and manufactured with all equipment and accessories providing for the operator's safety and health protection.

The machine is covered completely to eliminate the risk of contact with moving parts as much as possible.

There is, however, one residual risk.

As mentioned above, the working zone is protected at the most; however, it must remain partly open so that the material bevelled can be inserted.

It is therefore possible for the operators to insert their fingers in this zone, in which both the cutting tool and work-piece holder are located.

⚠ Warning:
Always keep your hands as far from the cutting zone as possible.

⚠ Warning:
Always apply the safety rules contained in the manual and see that they are observed and all residual risks are eliminated.

TECHNICAL SPECIFICATIONS

3.1 Machine description

The bevelling machine, model UZ50 Triumph, has small dimensions. One of its main characteristics is the adjustable bevel angle and automatic material feed.

The machine is equipped with a milling cutter, sturdy work-piece holder, direct reading scale used for setting of values (bevel size, material thickness and machining angle adjustment), and a special guide which facilitates inserting of the material.

These characteristics enable easy adjustment of the working angle without exchange of any part and precise control of the bevel size.

The UZ50 Triumph bevelling machine is reliable and necessitates minimum maintenance only.

3.2 Technical data

Tool drive			
Motor	**1x**	**ACA1001C-4/HE IP55**	
Motor output		**4**	**kW**
Motor speed		**1435**	**rpm**
Spindle speed		**685**	**Rpm (50Hz.)**
Tool diameter		**85**	**mm**
Tool teeth number		**5**	
Cutting speed		**182**	**m/min**
Feed			
Motor	**2x**	**FCA63B-6 IP55**	
Motor output		**0.12**	**kW**
Motor speed		**890**	**rpm**
Gearbox	**2x**	**HF40**	
Gear ratio		**1:200**	
Feed range		**0-1.2**	**m/min (according to cutting conditions)**
Plate thickness		**7 ÷ 80**	**mm**
Angle range		**15°-60°**	**(gradually)**

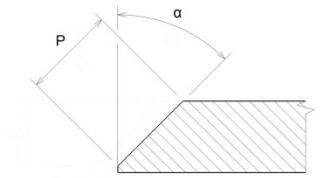

Bevel size for steel at the individual angles

angle α	max. bevel width (P)
15°	62 mm (recommended machining in 3 steps)
20°	62 mm (recommended machining in 4 steps)
25°	56 mm (recommended machining in 4 steps)
30°	52 mm (recommended machining in 5 steps)
35°	51 mm (recommended machining in 5 steps)
40°	51 mm (recommended machining in 5 steps)
45°	50 mm (recommended machining in 5 steps)
50°	51 mm (recommended machining in 5 steps)
55°	51 mm (recommended machining in 5 steps)
60°	52 mm (recommended machining in 5 steps)

Dimensions: Fig. 3.2.1.

Weight: 175 kg

(*) The exact values of voltage and frequency are indicated on the motor identification plate.

Fig. 3.2.1.

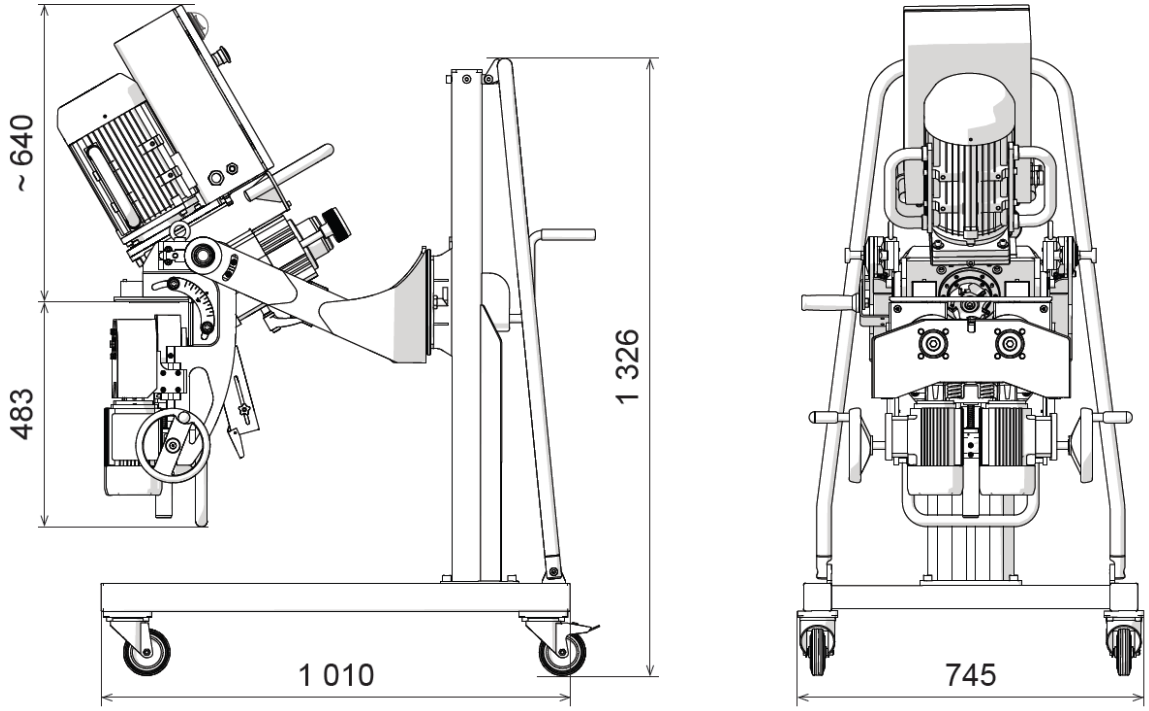

3.3. Noise level

The machine has been designed and manufactured to emit as little noise as possible.

In some cases and working conditions, the continuous sound pressure level according to measurement A exceeded 85 dBA. The worker must use ear protectors.

3.4 Working environment conditions

The working environment of the machine must conform to these values:

Temperature: 0 °C - 50 °C
Humidity. 10 % - 90 % (non-condensing)

The machine must be located at covered place and must be protected from rain.

Working environment conditions different from the above-mentioned ones can cause serious damage to the machine, especially to its electric equipment.

If the machine is out of operation, it can be stored at a place with the temperature within the range of:
-10 °C to 70 °C

All the other values remain unchanged.

INSTALLATION

4.1 Transport and lifting

Important:
The activities described in this section can only be executed by qualified personnel.

Suitable unloading and setting devices (cranes, lift trucks, etc.) must be ready at the destination place).

When the machine has arrived at the destination, check (in the carrier's presence) whether it meets the order specifications and was not damaged during transport. If you find any damage or parts are missing, immediately inform N.KO and the carrier in detail.

Warning:
Observe the following instructions and ensure safe handling with the machine:

- Keep your distance from hanging loads and make sure that the lifting device and pertinent tools are in perfect order and are suitable for the weights indicated in Par. 3.2.

- When handling the machine, wear protective clothes, like work gloves, footwear with anti-slip soles and a crash helmet

- If the machine is in its transport package, remove and dispose of it in conformity with valid laws of your country.

- If you are to lift the machine with a crane, use suitable textile or chain lifting devices. Lifting eyes are mounted on the machine (see Fig. 4.1.1.)

Fig. 4.1.1

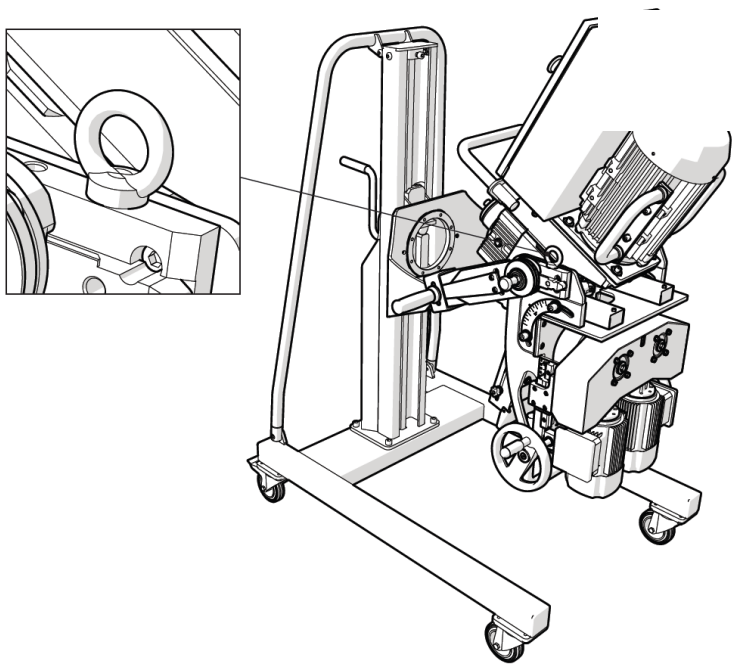

4.2 Location and connection

Important:
The activities described in this section can only be executed by qualified personnel.

If the machine is used for machining small parts, it must be set on an even surface and secured with a brake against movement (Fig. 4.1.1).

If the machine is used for machining big parts, it must be located on the actual work-piece and move upon it during work by itself, with the 3D manipulator being dragged together with the machine. If you will not use the 3D manipulator, it is suitable to suspend the machine on a band, see Fig. 4.1.1, during approach to the material and leaving it at the end.

During electric connection, proceed as follows:

- check the frequency and voltage value on the motor identification plate;

- connect the cable end to the power supply with a plug according to your local power network.

4.3 Checks before commissioning

Important:
Never start UZ50 Triumph without the checks described in this paragraph.

Before starting the machine, check that it is operational by means of the following inspections and checks to achieve maximum efficiency and meet the safety regulations:

- check that all screws and other parts are tightened;

- check that all electric connections have been made correctly and the electric cable is fixed in place with a cable gland;

- To start the machine, proceed as follows:
  Unlock the machine with the red emergency lockable button (position B, Fig. 2.4.1.).
  Start the motor with the green button. The milling cutter must rotate clockwise.

If it does not, you must switch the phases in the plug.

- To switch off the machine, push the red button next to the start switch.

4.4 Scrapping and disposal

When disposing of the UZ50 Triumph machine, remember that the materials from which it is manufactured are not hazardous, comprising mainly:

- ferritic steel, painted or metalized;
- stainless steel, series 300/400;
- plastic material of different character;
- gearbox oil;
- electric motor;
- electric cables and pertinent jackets;
- electric monitoring and exciting devices.

Follow this procedure:

- observe valid laws of your country regarding the working environment safety;
- disconnect the machine from power supply;
- dismount the machine and classify the parts according to their chemical characteristics;
- scrap the machine parts in conformity with valid laws of your country;
- during the dismounting phase, strictly observe valid regulations regarding labour safety.

USE

5.1. Correct use

The bevelling machine, model UZ 50 Triumph, has been designed, manufactured and sold for bevelling metal parts and rolled metals of these kinds: **iron, steel**, **stainless steel**, brass, copper, aluminium.
UZ50 Triumph is designed for bevelling materials of larger formats and thickness, located on supports or working tables. The plate must be placed at the height of 700 mm to 1100 mm.

To machine material of small dimensions, which you want to insert in the machine directly "by hand", you must install a special insert for processing small material formats (to be delivered in 2013 at the latest).
The maximum and minimum bevel dimensions and thickness of the material machined are indicated in detail in chapter 3, par. 3.2 "Technical specifications".

Other use different from the above described are considered improper. Namely, it is forbidden to:

- machine products different from those for which the machine has been designed or sold;
- modify the machine operation;
- replace parts with unoriginal parts;
- modify electric connections, thus jumping the internal safety devices;
- remove or modify protective covers;
- use the machine at places with aggressive atmosphere.

⚠ Warning:
It is strictly forbidden to bevel materials different from those indicated because their processing may pose a risk to the operator and damage the machine.

Before making any modifications, you must ask the N.KO company for the pertinent approval. Otherwise the N.KO company disclaims any responsibility.

5.2. Description of controls

The bevelling machine is controlled by means of control elements located on the distribution box and the remote controller.

Fig. 3.1.1.

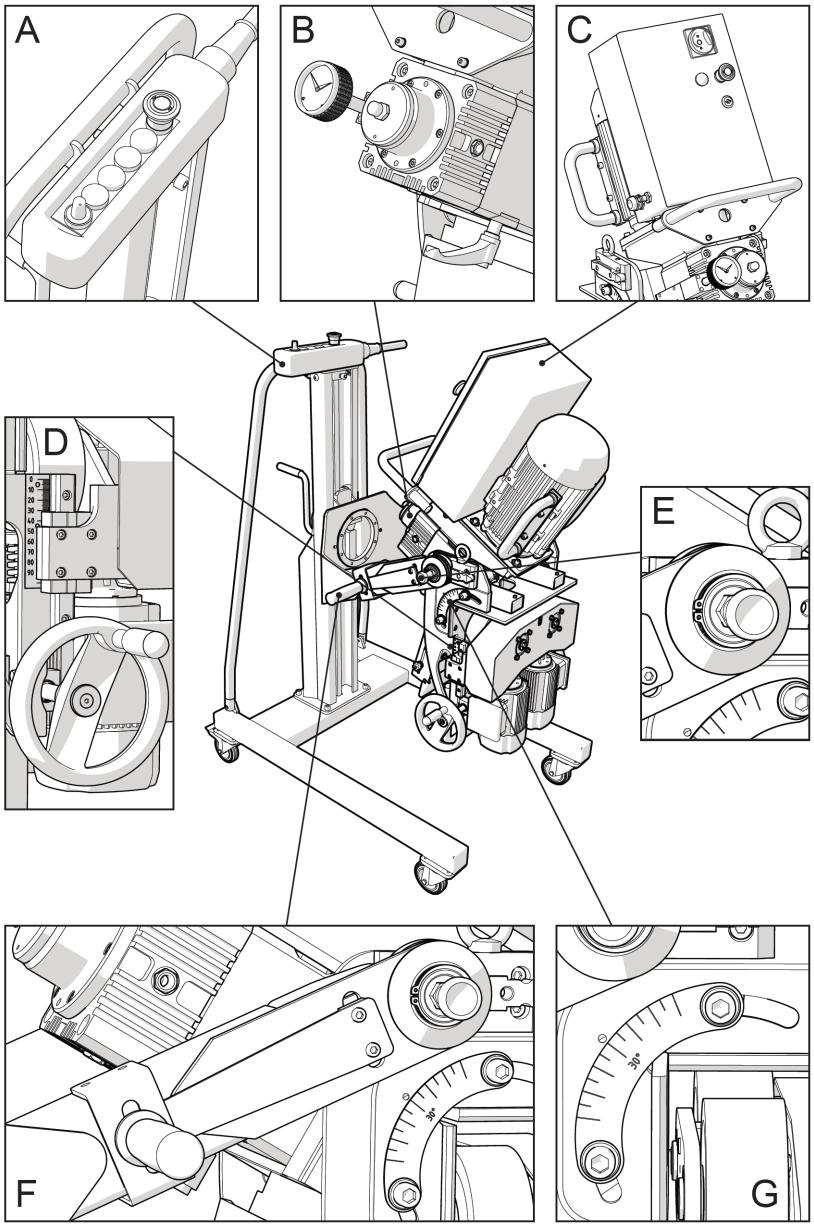

A- Remote control with feed speed control and a magnetic holder
B- Elements for adjusting the bevel size
C- Distribution box with the main and emergency switch and standby mode button
D- Elements for adjusting the lower slide
E- Lock for disconnecting the 3D manipulator
F- Control lever of the machine inclination
G- Angle adjustment detail

Distribution box

Fig. 5.2.1.

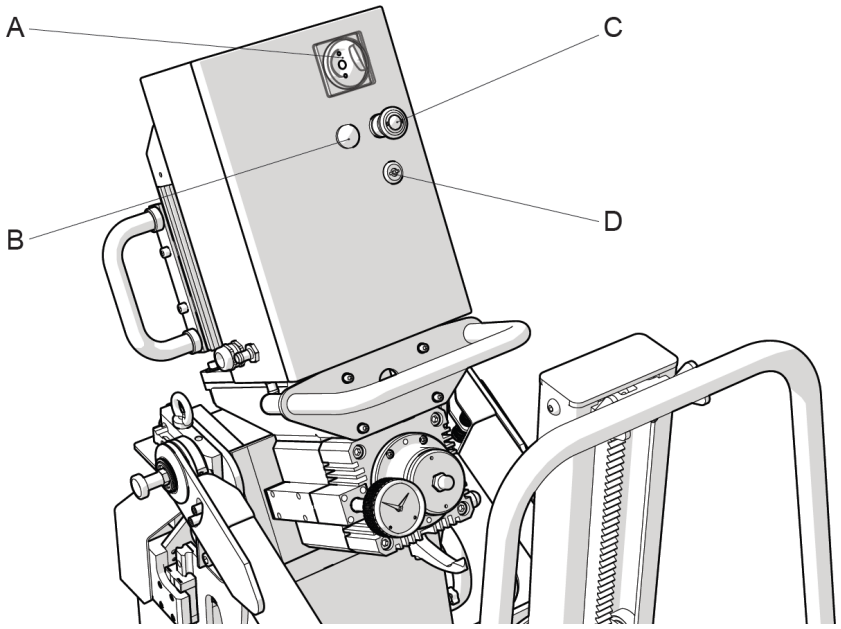

a) Main on/off switch
b) Standby mode button
c) Safety emergency button immediately stopping the machine
d) Distribution box lock

Remote controller

The remote controller is equipped with magnets and can be attached to the machine or held in hand according to current conditions.

Fig. 5.2.2.

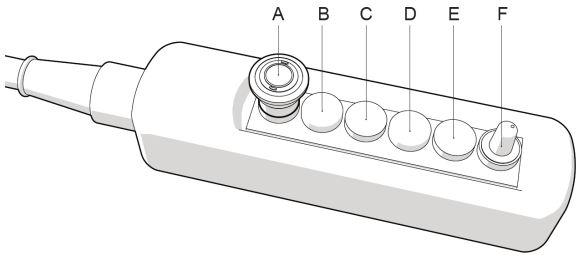

a) Safety emergency button immediately stopping the machine
b) Switching the spindle on. Pushing the button switches the motor on. Heed the tool rotation direction.
c) Switching the spindle off
d) Switching the feed on
e) Switching the feed off
f) Feed speed control

5.3. Preliminary adjustments

⚠ Warning:
Wear protective work gloves when making the adjustment. The operations must be executed if the machine is stopped and disconnected from power supply.

Before starting your work, you must perform the following adjustments:

Material preparation

The material to be machined must be placed on a suitable worktable or supports so that the edge of the sheet metal is in the required distance from the table or supports; i.e. min. 200 mm for the standard work position, for the head downwards position the minimum distance is as shown in fig. 5.3.0.
The material must be secured against movement.

Fig. 5.3.0

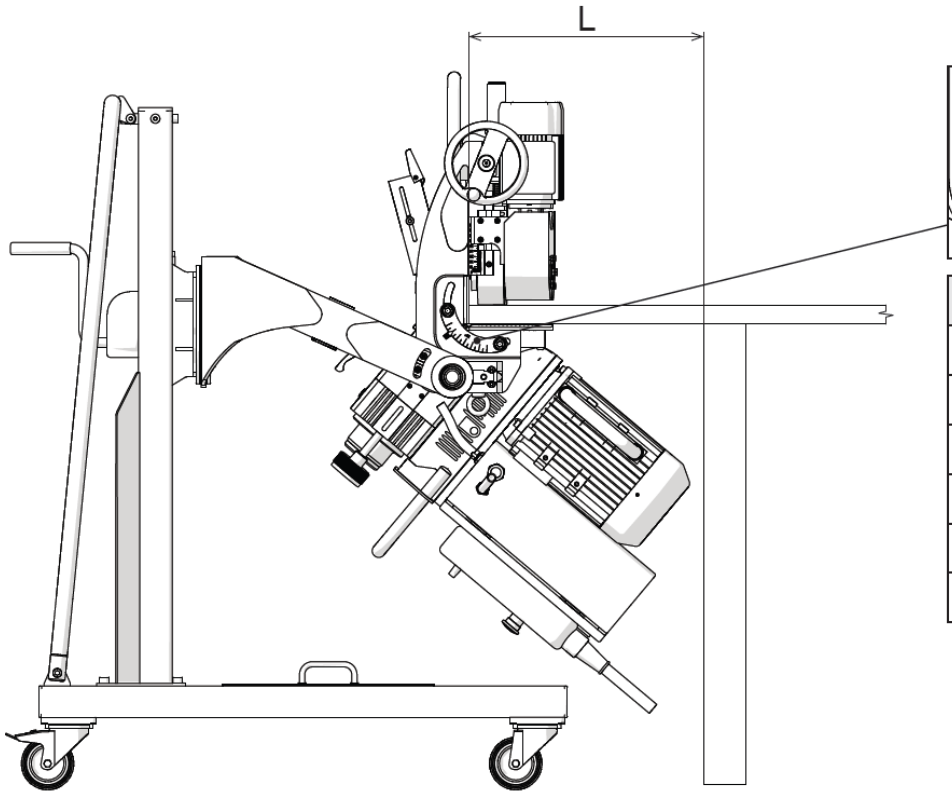

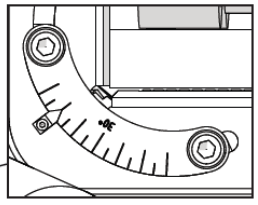

α	L (mm)
60°	500
50°	450
40°	400
30°	320
20°	240
15°	200

Adjust the bevel angle

The bevel angle can range from 15° to 60°. Make the adjustments as follows:

- Sufficiently loosen the 2 and 2 screws (position A, Fig. 5.3.1) located on both sides of the machine.
- Holding and pulling the upper handle, adjust the entire machine unit to the desired angle.

- You can view the adjusted angle value on the divided scale located at the side of the machine (position B, Fig. 5.3.1).
- Having completed the operation, properly tighten the 2 and 2 screws on both sides (position A, Fig. 5.3.1).

Important:
If you have problems with adjustment of the angles, the screws may not have been loosened sufficiently (position A, Fig. 5.3.1).

Fig. 5.3.1

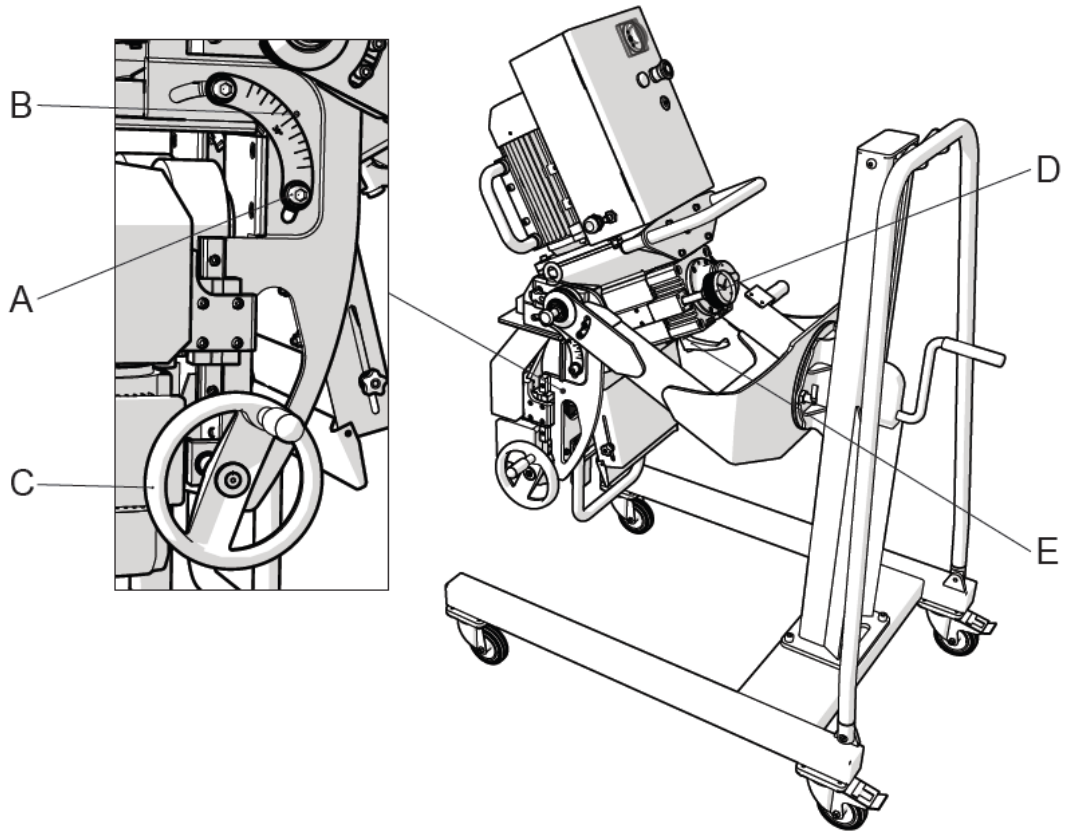

Setting the zero value:

To set the cut-off size correctly, you must specify the zero point (point at which the cutter touches the material) for the specific angle before starting the work.
This point must be specified for every new bevel or changed angle.
Proceed as follows:

- Loosen the locking lever of chip adjustment (position E, Fig. 5.3.1).
- Move the cutter fully into the spindle by means of the chip setting wheel (position D, Fig. 5.3.1).
- Adjust the lowest position of the lower slide according to the picture (position C, Fig. 5.3.1.) by means of the adjusting wheel of the lower slide.
- Set the optimum working height, position and inclination of the machine by means of the 3D manipulator.
- Set the machine anywhere on the plate machined so that the vertical and horizontal ruler adjoins to the material along all of its length (Fig. 5.3.2).
- Start the cutter motor and check the tool rotation direction.
- By means of the chip adjusting wheel, gradually move the cutter towards the material up to the point at which it touches the material. Thus you have specified the zero point for the given angle (Fig. 5.3.2.).
- Retighten the locking lever of chip adjustment (position E, Fig.. 5.3.1).

Fig. 5.3.2.

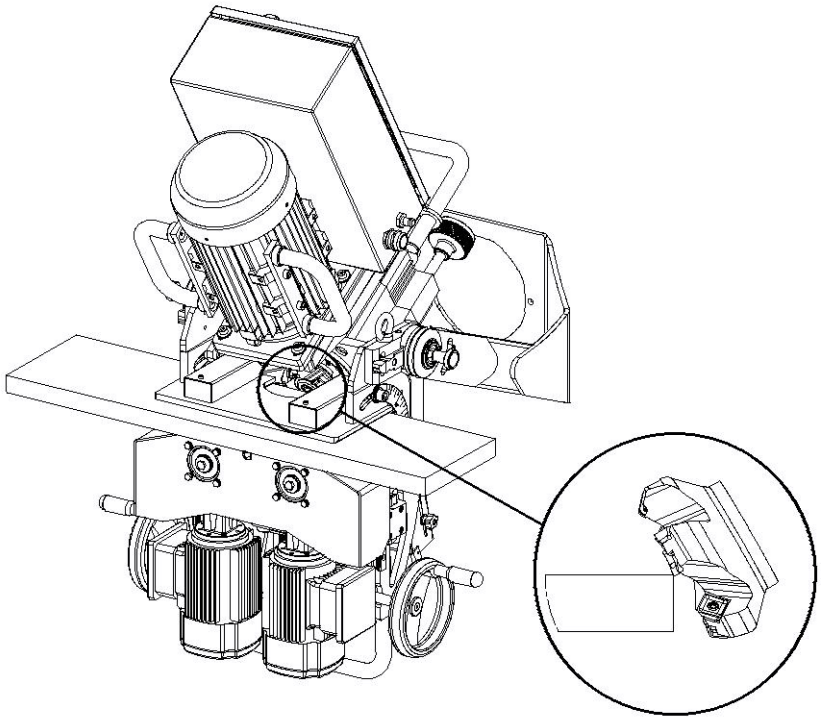

Lower slide adjustment:

The lower slide task is to continually move the machine along the material or move the material through the cutting tool if small parts are machined. The feed speed can be controlled with the remote controller. The lower slide must be adjusted so that it properly ensures the fixed material against its vibrations or loosing during cutting. For this reason, the lower slide has been designed so that it acts upon the material

with the force of a spring mechanism with controllable pre-load. Another advantage of this solution involves cushioning and adaptability to sudden changes in the machined material thickness during cutting.

- The lower slide is adjusted according to the machined material thickness. Always set the scale value (Fig. 5.3.3.) **pointer A** 5-8 mm lower than the actual thickness of the material machined. The prescribed 5-8 mm stands for the spring pre-load. Adjust by means of the control wheel (position C, Fig. 5.3.1.). Thus control element is mounted at both sides of the machine for easier access.

Fig. 5.3.3.

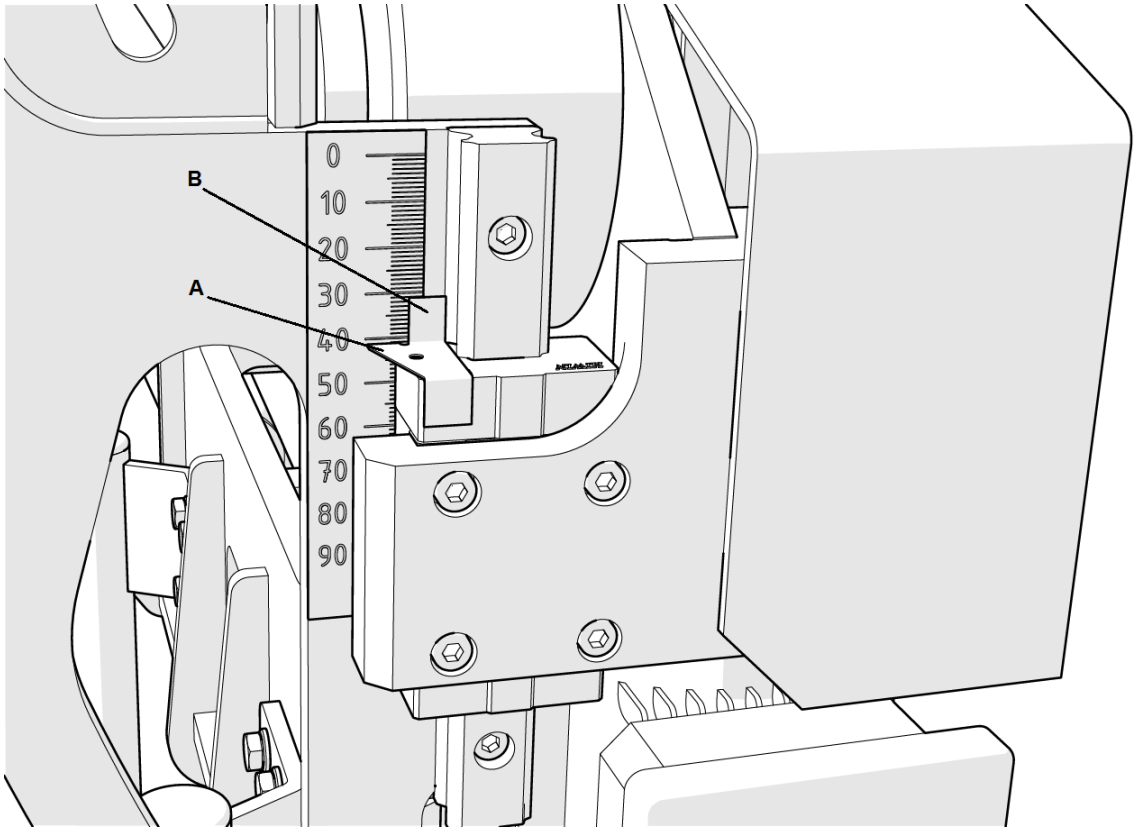

5.4 Cut-off and machining setting

The UZ50 Triumph machine is able to make the bevel width of up to 62 mm at certain angles (see par. 3.2.). These values can only be achieved by gradually machining in several cut-offs.

Setting the first cut-off

Important: Correct setting of the cut-off is determined by previous setting of the zero point. Without this pre-setting, the cut-off may be set incorrectly and the cutter or the machine damaged.

- Loosen the locking level of chip adjustment (position E, Fig. 5.3.1).

- Adjust the first cut-off with the chip adjusting wheel (position D, Fig. 5.3.1) as required. To read the values correctly, use the chart located on the machine distribution box (Fig. 5.4.1.)

  Important: The maximum depth of the individual cut-off is 5 mm (cutter protrusion). Specifically, 25 divisions M on the adjusting wheel scale. If you set more for a single cut-off, there is immediate risk of damaging the tool or the machine.

- Retighten the locking lever of chip adjustment (position E, Fig. 5.3.1).
- We recommend you to note down the values set on the adjusting wheel scale (position D, Fig. 5.3.1). This will help you to adjust the next cut-off.

Fig. 5.4.1

α	A												
	1	5	10	15	20	25	30	35	40	45	50	55	60
	M	M	M	M	M	M	M	M	M	M	M	M	M
15	1,5	6,5	13,0	19,5	26,0	32,5	39,0	45,5	52,0	58,0	64,5	71,0	77,5
20	1,5	8,5	17,0	25,5	34,0	43,0	51,5	60,0	68,5	77,0	85,5	94,0	102,5
25	2,0	10,5	21,0	31,5	42,5	53,0	63,5	74,0	84,5	95,0	105,5	116,0	
30	2,5	12,5	25,0	37,5	50,0	62,5	75,0	87,5	100,0	112,5	125,0		
35	3,0	14,5	28,5	43,0	57,5	71,5	86,0	100,5	114,5				
40	3,0	16,0	32,0	48,0	64,5	80,5	96,5	112,5					
45	3,5	17,5	35,5	53,0	70,5	88,5	106,0	123,5					
50	4,0	19,0	38,5	57,5	76,5	96,0	115,0						
55	4,0	20,5	41,0	61,5	82,0	102,5	123,0						
60	4,5	21,5	43,5	65,0	86,5	108,5							
	in 1 cut		in 2 cuts	in 3 cuts	in 4 cuts	in 5 cuts							

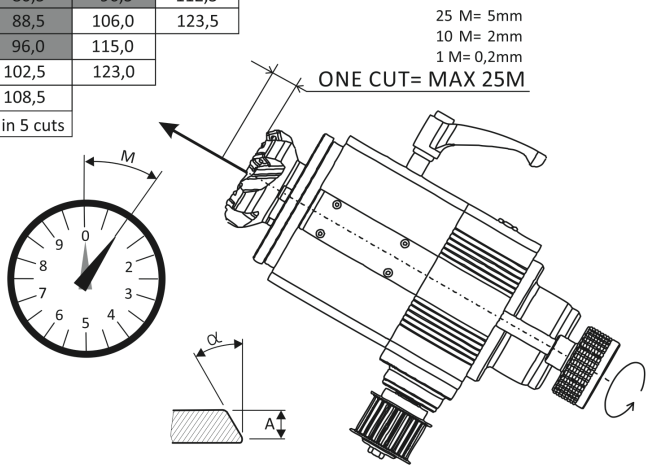

How to understand the table:
Find the angle and bevel height A according to your specification in the chart. In the M column you will find the needed number of division marks that you have to set on the chip setting wheel (pos. D, fig. 5.3.1) The field with the found setup value helps you to find out what is the number of cuts necessary for making the required bevel.

In case that the bevel height A has such a value that cannot be found in the table, e.g. 18 mm, it is possible to calculate the size of cut using the column for the bevel height A = of 1 mm.

Example:
Bevel height 18 mm.
Bevel angle 45°

Solution:
Find in the table

- the value 53 division marks on the cross point of 45° and bevel height 15 mm.
- the value 3,5 division marks on the cross point of 45° and bevel height 1 mm.
- calculate the needed number of division marks to achieve the required bevel of height A of 18mm using the following equation:

3,5 division marks (1mm) x 3 (because 3mm) = 10,5 division mark + 53 (15mm) = 63,5 division marks TOTAL.

The maximum number of division marks for one cut is 25M, which means that we may cut as follows:

You can cut the bevel with using of the max values		**Or you can divide the total number of division marks more equally, which is much more better for the machine and the cutter. The number of the cuts remain same.**	
1st cut	25M	**1st cut**	**20M**
2nd cut	25M	**2nd cut**	**20M**
3th cut	13,5M	**3th cut**	**23,5M**

TIP: Divide individual cuts in such a way that the last cut is the smallest one.

Set the movement to lower values. This will result to better final surface of the bevel.

Machining

- Set the machine at the plate edge. Adjust the optimum position and inclination of the inlet rulers by means of the adaptive 3D system. The machining direction is left-to-right in the standard position. In the case of upside-down work, the direction is right-to-left.
- Star the cutter and feed motors and set the feed speed to approx. 25 % of the total speed range. The maximum speed of the machine is 1.2 m/min.
- Slowly pulling the pertinent handles, guide the machine onto the material, checking its run onto the plate. The machine must run onto the plate simultaneously with the guide rules with which it must be in contact.
- After the machine fully runs onto the material, when the material is held by the two feed rollers, you can increase the feed speed. This speed is not determined in any way; it must be properly adjusted according to the state of the cutting plates, material quality and cut-off size.
- During bevelling, a situation may occur when you need to adjust the position and inclination of the machine by means of the 3D manipulator. This happens if the machined plate is set on the supports incorrectly or if the working place floors are in a bad state.
  In this case, it is suitable to loosen the pertinent mechanisms on the 3D manipulator and fully exploit the advantages of the adaptive 3D system (Fig.5.4.3., pos. A, C). The lifting mechanism can be moved a little lower independently of the machine, thus enabling the machine to lay on the material at the moment to move along the vertical line freely (Fig. 5.4.3., pos. B).
- If the floors are damaged extremely, the machine, having fully run onto the material, can be disconnected from the 3D manipulator (Fig. 5.4.2.). In this mode, the machine runs on the material by itself without the need of any support. After disconnecting, you must release the 3D manipulator lock (Fig. 5.4.2., pos A).
  Before running out of the material, you must connect the 3D manipulator again in the same way and adjust the machine position for running out of the material. The machine fed can be stopped or started by means of the feed control.
- The machine may also be used without the manipulator, suspended on a crane. The lifting eyes on the machine are used for that (see Fig. 4.1.1.)

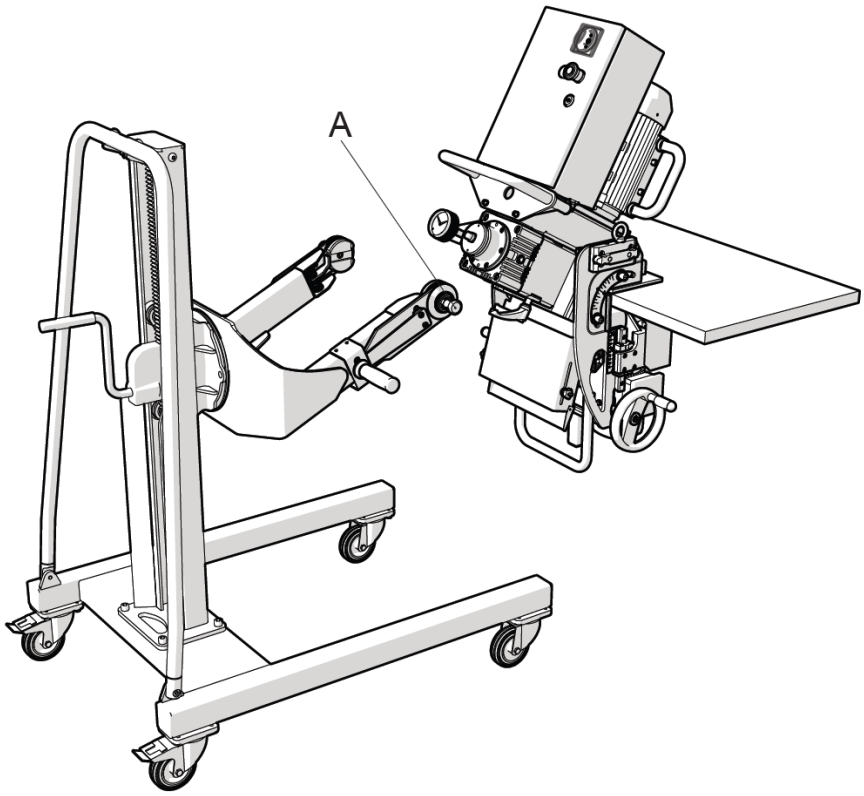

Fig. 5.4.2.

Fig. 5.4.3.

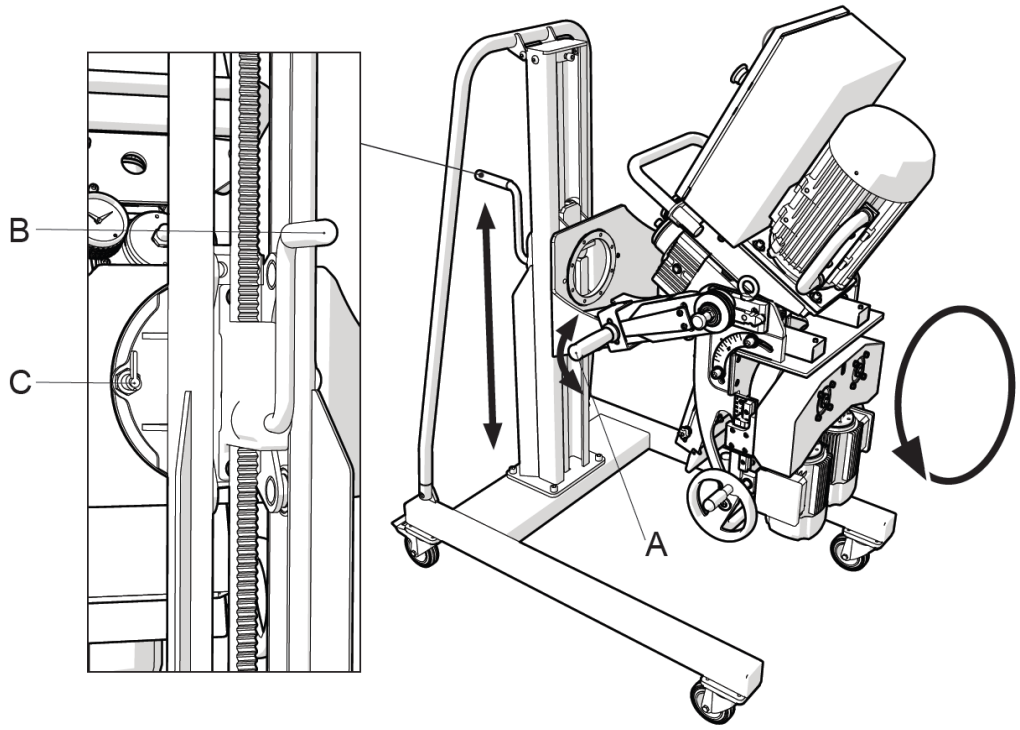

Further cut-off setting

The UZ50 Triumph is able to create bevels of the width of up to 62 mm at certain angles (see par.3.2.). These values can only be achieved by gradual machining in several cut-offs.

- Loosen the locking lever of chip adjustment (position E, Fig. 5.3.1).

- Adjust the next cut-off with the chip adjusting wheel (position D, Fig. 5.3.1) as required. To read the values correctly, use the table located on the machine distribution box (Fig. 5.4.1.)

Important: The maximum cutting depth of individual cut-off is 5 mm (cutter protrusion). Specifically, 25 divisions on the adjusting wheel scale. If you set more for a single cut-off, there is immediate risk of damaging the tool or the machine.

- Retighten the locking lever of chip adjustment (position E, Fig. 5.3.1).
- We recommend you to note down the values set on the adjusting wheel scale (position D, Fig. 5.3.1). This will help you to adjust the next cut-off.

- Start cutting. Proceed in the same way as with the first cut-off.

- All further cut-offs repeat the above-mentioned in chapter 5.4

  TIP: Calculate the individual cut-offs so that the last one is not too deep. Set a lower value of the feed. The final surface of the bevel will be better.

Upside-down work

One of the main advantages of the UZ50 Triumph machine and 3D manipulator is the possibility of upside-down work. Namely, the possibility to make double-sided bevels without the necessity of handling the material. Proceed as follows:

- Release the rotation lock (Fig. 5.4.4., pos.). Make sure that the machine is sufficiently high above the floor after being turned.
- Hold the machine by the pertinent handles and turn it by 180°.
- Relock the rotation lock.
- Close and secure the lid of the chip removal channel (Fig. 5.4.4).
- Set the machine in a suitable position and inclination according to the material position and situation at the workplace.
- Then specify the zero point again; see chapter **5.3. Preliminary settings**, par. **Zero value specification**.
- Then set the machine for the first and next cut-offs, see chapter **5.4.**
- Start machining.

Important: The machined material must be located on supports at a sufficient height so that the machine distribution box will not collide with the floor. The edge of the material to be machined must be positioned in a sufficient distance from the supports in order to prevent a collision with the distribution cabinet, see Fig. 5.3.0.

Fig. 5.4.4.

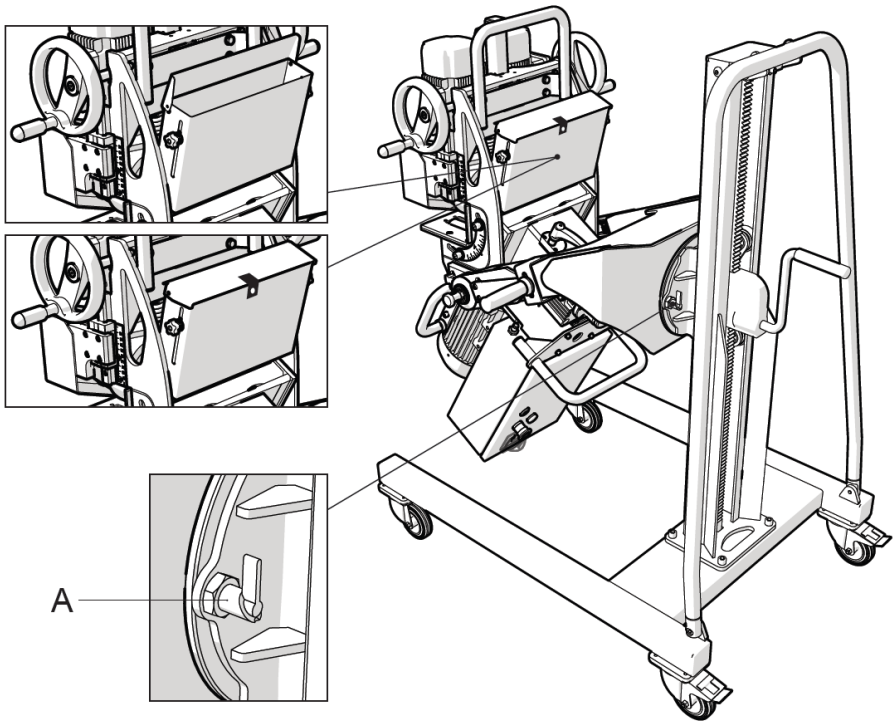

MAINTENANCE AND ADJUSTMENT

6.1 Recommendations

Important:
The maintenance workers must be qualified technicians.

Never work on machine parts in motion, not even with tools or other subjects..

It is strictly forbidden to remove safety devices, modify them, or tamper with the safety devices of the machine. In such an event, the manufacturer disclaims any responsibility for the machine safety.

Always use original spare parts (see chapter 8 “Spare parts”).

Warning:
Always wear protective work gloves when maintaining the machine. The maintenance operations must be executed if the machine is stopped and disconnected from power supply.

Before every working shift, and then during it as necessary, clean the machine, tool and moving parts with compressed air.

Warning:
When using compressed air for cleaning, wear protective goggles, and never use pressure over 2 bar.

For adjusting and maintenance, use the tools delivered with the machine.

6.2 Cutter and cutting blades disassembly

Warning:

When changing tools, use protective gloves.

UZ50 Triumph uses for cutting a face mill of our own design with cutting plates with four cutting sides. Only an original milling head and cutting place are strongly recommended to be used. If other than original tools are used, the manufacturer holds no responsibility for possible injuries or damages to the machine!
To exploit the cutting plates fully, these must be turned when they are blunt. On the whole, 4 cutting sides are at disposal for every plate.
The state of the cutting tips must be checked continuously; if they are worn, you must turn them in time.

Cutter head disassembly:

- Disconnect the machine from power supply.
- By means of the wheel for lower slide adjustment, set the lowest position of the lower slide according to the picture (position C, Fig. 5.3.1).
- Loosen sufficiently the 2 and 2 screws (position A, Fig. 5.3.1) located at both sides of the machine.
- Holding and pulling the upper handle, adjust the entire machining unit to the angle which is most suitable for access to the cutter.
- Loosen the locking lever of chip adjustment (position E, Fig. 5.3.1).
- By means of the chip adjustment wheel (position D, Fig. 5.3.1), move the cutter to the position in which the access to it is most suitable.
- Lock the spindle against rotation. Use the enclosed hook spanner (position A, Fig. 6.2.1).
- With the enclosed spanner, loosen the main central screw which fastens the cutting head to the spindle (pos. B, Fig. 6.2.1)..
- Remove the screw including the central insert and pull the cutting head from the spindle manually. If it is not possible, use clamping bolts prepared on the milling head. These are located below the central insert of the machine in position (Fig.. 6.2.2., pos. C)

See video how to dismount the milling head: http://www.youtube.com/watch?v=ic8an0yw2PY

Fig. 6.2.1

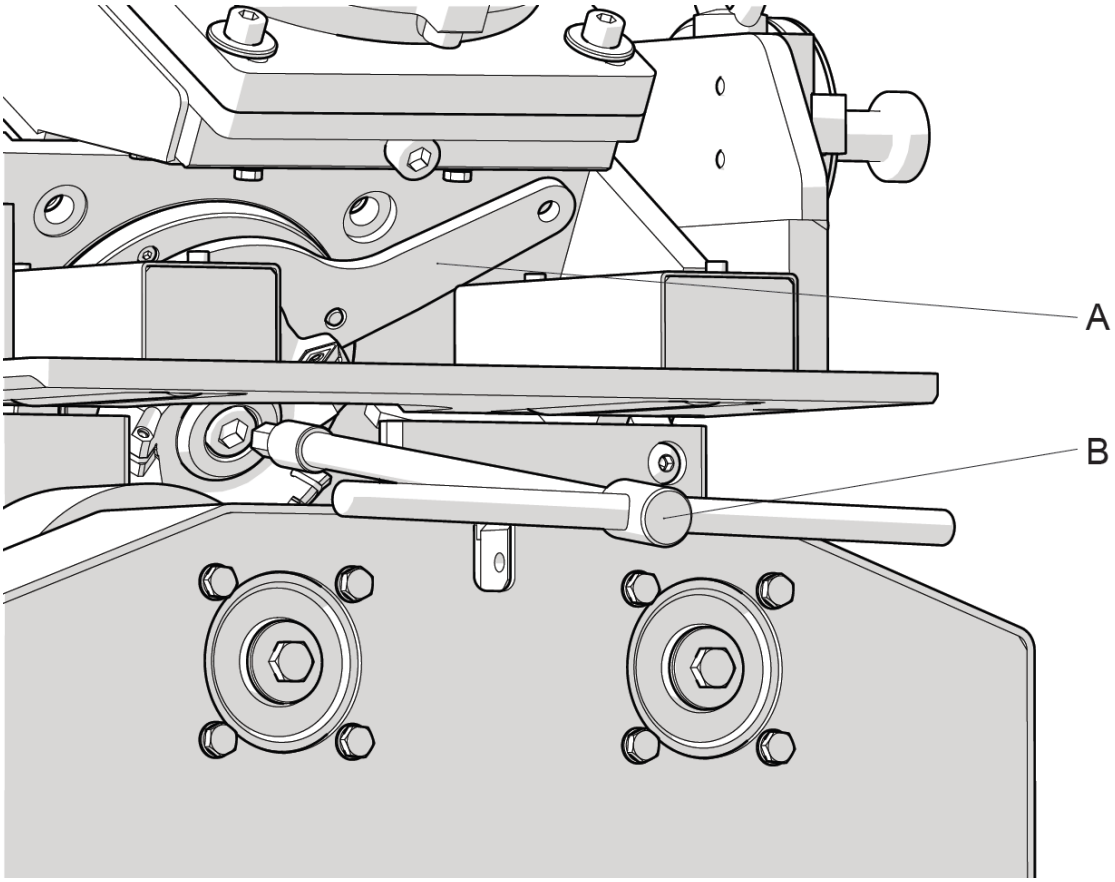

Replacement or turning of cutting plates:

- Put the cutting head on a suitable surface. The UZ50 Triumph cutter is equipped with 5 plates.
- Loosen the screw (Fig. 6.2.2., pos. A) of the cutting plate (Fig.. 6.2.2., pos. B) with the enclosed spanner and then turn or replace it.
- Some UZ50 Triumph cutters can be equipped with so-called sub-plates. These are pads under the cutting plate. If your machine is equipped with them and if they are damaged, you must replace them as well.
- Mount the cutter back.

Important: Keep all parts of the cutter head (plates, screws, cutter screw) and the spindle clean.
Otherwise there is a risk that the cutting plates will be seated incorrectly and their service life reduced or the cutter head blocked on the spindle with subsequent problems during the next disassembly.

Fig. 6.2.2.

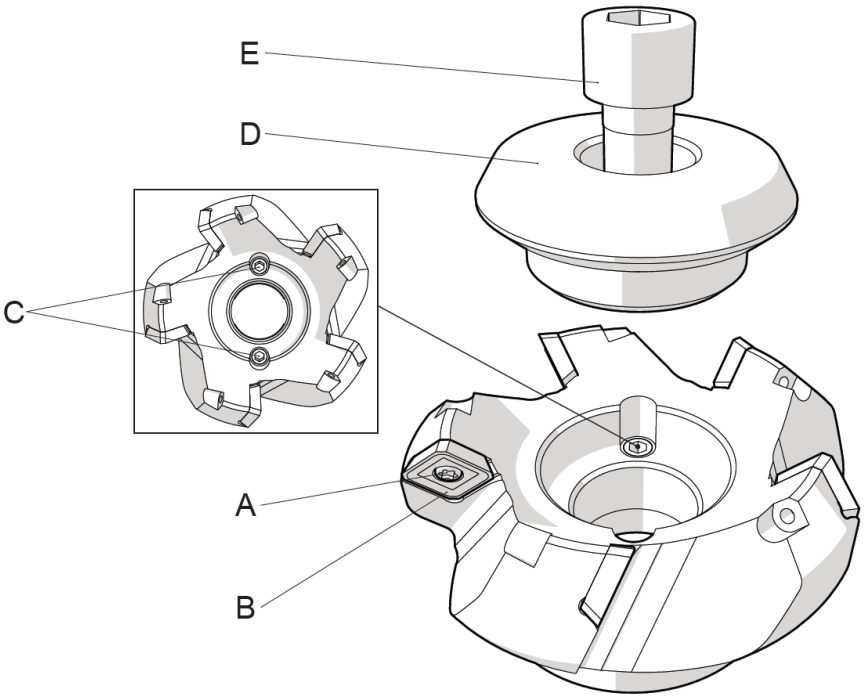

6.3 Headstock oil replacement and refilling

The UZ50 Triumph machine headstock contains oil which is subject to wear. The first change must be executed after 10 machine hours!!! (converging of cogged wheels). Then, the next changes after every 1,500 working hours.

Exchange the oil as follows:

- Stop the machine and disconnect it from power supply.
- Set the machine in an optimum position for discharging the oil. The discharge screw (Fig. 6.3.1. pos. C).
- Put a suitable vessel for the used oil under the discharge hole.
- Remove the discharge screw (Fig. 6.3.1., pos. C).
- Remove the bleed screw (Fig 6.3.1., pos. A).
- Wait until all the oil has run out, and then mount back the discharge screw (Fig. 6.3.1., pos. C).
- Fill the headstock with new oil though the filling hole (Fig. 6.3.1., pos. A) (Mobilgear 600 XP68 ISO12925-1 typ CKD68 AGMA 9005-E02 2EP) – **200ml.**

- Check the oil level in the oil gauge. The level must at least reach the middle of the gauge (Fig. 6.3.1., pos. B).

- Mount back the bleed screw (Fig. 6.3.1., pos. A).

Important: The volume of the oil in the gearbox is exactly 200ml. Not more. No less!

TIP: Perform the change with the machine warmed up. The oil will drain off easier.

Fig. 6.3.1.

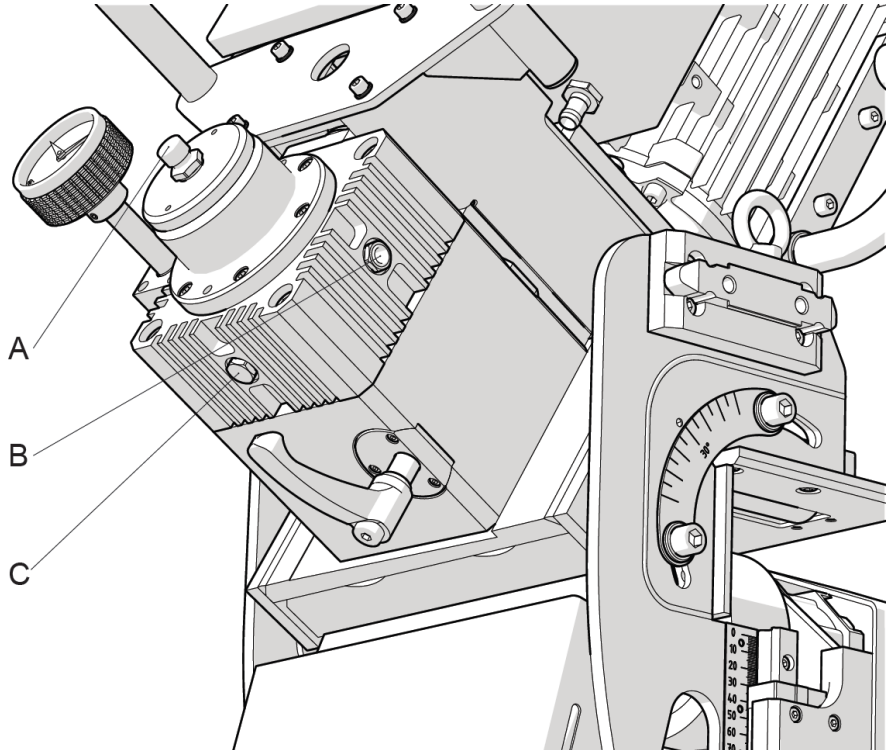

Lubricating of the machine

There are also several lubricating points on the machine. They are located on the machine (see chapter 7.3 the list of the spare parts - positions 1940.3010 linear guidance, 1940.6001 lift gearbox a 1930.2002 lift gearbox of the 3D manipulator) and it is necessary to keep them clean and to lubricate each week. Recommended fat is Shell Alvania RL 2.

Important:
The old oil must be collected and disposed of in conformity with valid local laws. Never pour the oil into drains, sewers or soil.

6.5. Drive belt replacement

The UZ50 Triumph machine is equipped with a toothed belt for force transmission from the motor to the spindle. At the same time, the belt serves as a safety element in case of machine overload.
In reality, the belt may be broken in some situations.
Exchange the belt as follows:

- Disconnect the machine from power supply.
- Dismount completely the tension screw (Fig..6.5.1,. pos. B).
- Loosen and remove the screws on the cover flange of the belt case (Fig. 6.5.1., pos. A).

- Lift off the case cover (Fig..6.5.2.).
- Replace the belt with a new one.
- Mount back the cover.
- Tighten the belt with the tightening screw (Fig..6.5.1,. pos. B). The proper tightening indicator lines must be levelled (Fig. 6.5.2. Pos. C).
- Tighten the cover screws (Fig. 6.5.1., pos. A).
- Check the machine function.

See video how to exchange the belt: http://www.youtube.com/watch?v=bpP5vWvHXCI

Fig. 6.5.1.

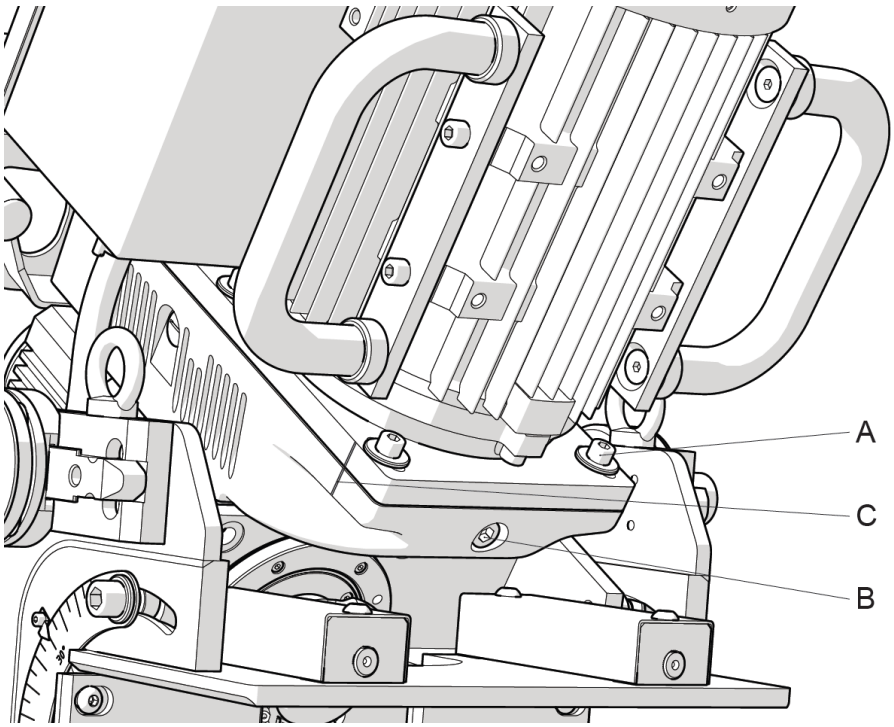

Fig. 6.5.2.

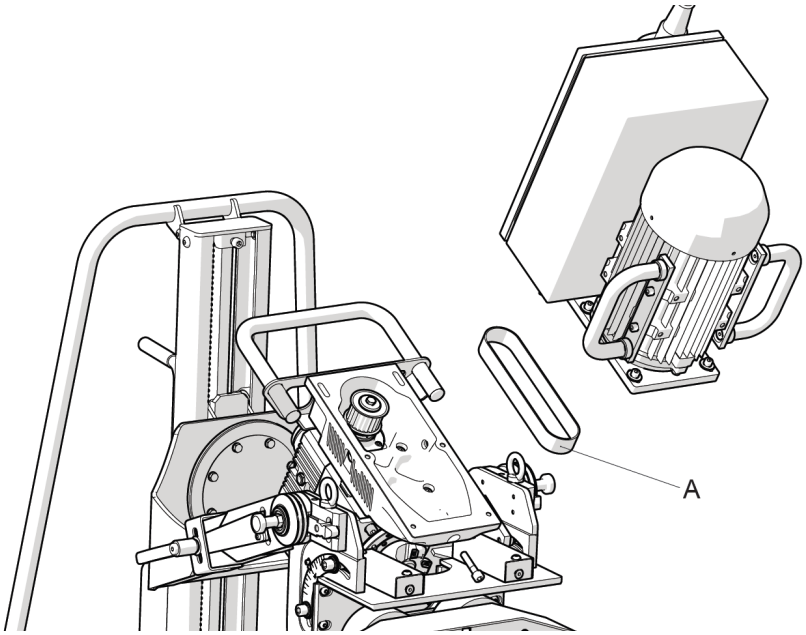

If operating the machine in rooms with extra-hazardous effects, AD and more, you must pay increased attention to the protection against electric shock!

Electric energy - in case of a failure, immediately switch off the power supply.
Work on the electric equipment of the machine can only be done by a qualified person or subordinate persons under his/her supervision so that the work is done according to electric engineering regulations..

No part on which maintenance is performed can be under voltage. It is necessary to check with a two-pole measuring instrument that the disconnected parts are not under voltage, then connect them to ground and insulate the surrounding parts under voltage!

Disconnect the power supply by turning the man switch to position “0”.

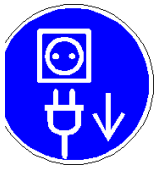

The electric equipment must regularly be checked, or tested. Shortcomings, loose connections, charred cables must be replaced immediately.

⚠ ATTENTION!- VERSION ASP

Some versions UZ50 machines can be equipped with an ASP (Active Smart Protection).
This system protects your machine against overload.
Protection consists in monitoring the manufacturing process and in case of overload, operator is informed by the system actively through the flashing lights on the remote control.
If the operator does not start the steps to reduce load on the machine (resizing of the cut, replacement of cutting inserts, decrease speed) in 20 sec, the system cuts power of the feeding wheels and the machine stops.
Attention, the system does not protect against impact overloading !!!
Information on how the machine is equipped with a system, can be found on the nameplate.

SPARE PARTS UZ50 Triumph

7.1 How to order spare parts

Orders of spare parts must contain this information:

- machine type;
- serial number;
- required part description and number
- quantity.

7.2. Parts most often liable to wear and tear:

Order No.	Description	Illustration
1945	Cutting plates (10 in package) For more types of inserts contact your supplier	
1946	Cutter head (without screws and cutting plates) For more types of milling heads contact your supplier	
1947	Plate screw	
1940.5007... Version G, P or T see drawing	Transmition belt	
1948	Polyurethan feeding wheel	
1940.OLEJ	Gearbox oil UZ50 1L	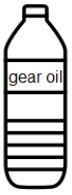
Alvania	Lubrication fat for the UZ50	

7.3 Eletric connection drawing and spare parts drawing and list

The inverter, which is instaled inside the machine UZ50 Triumph was programmed directly in the factory. The inverter is blocked. For unblocking contact your supplier.

Scheme UZ50 Triumph

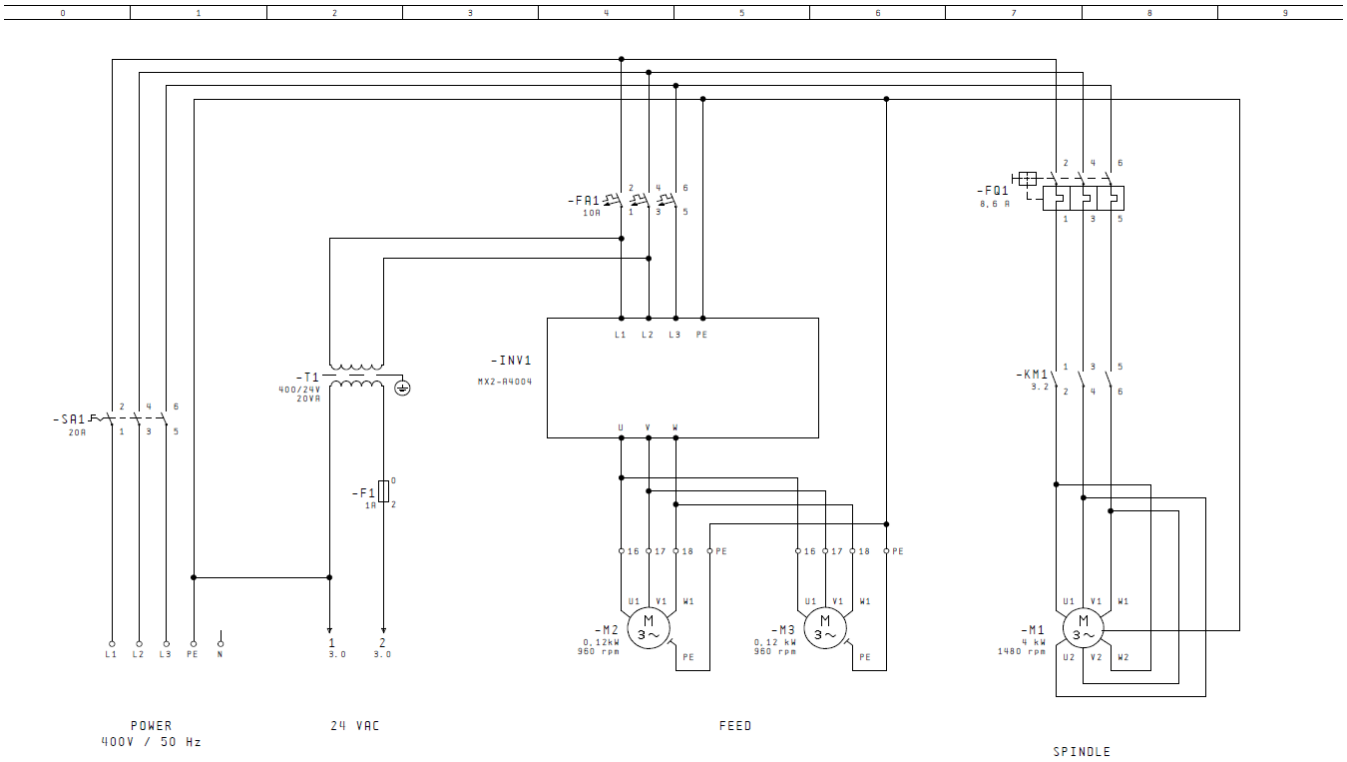

Scheme UZ50 Triumph – version ASP (Active Smart Protection)

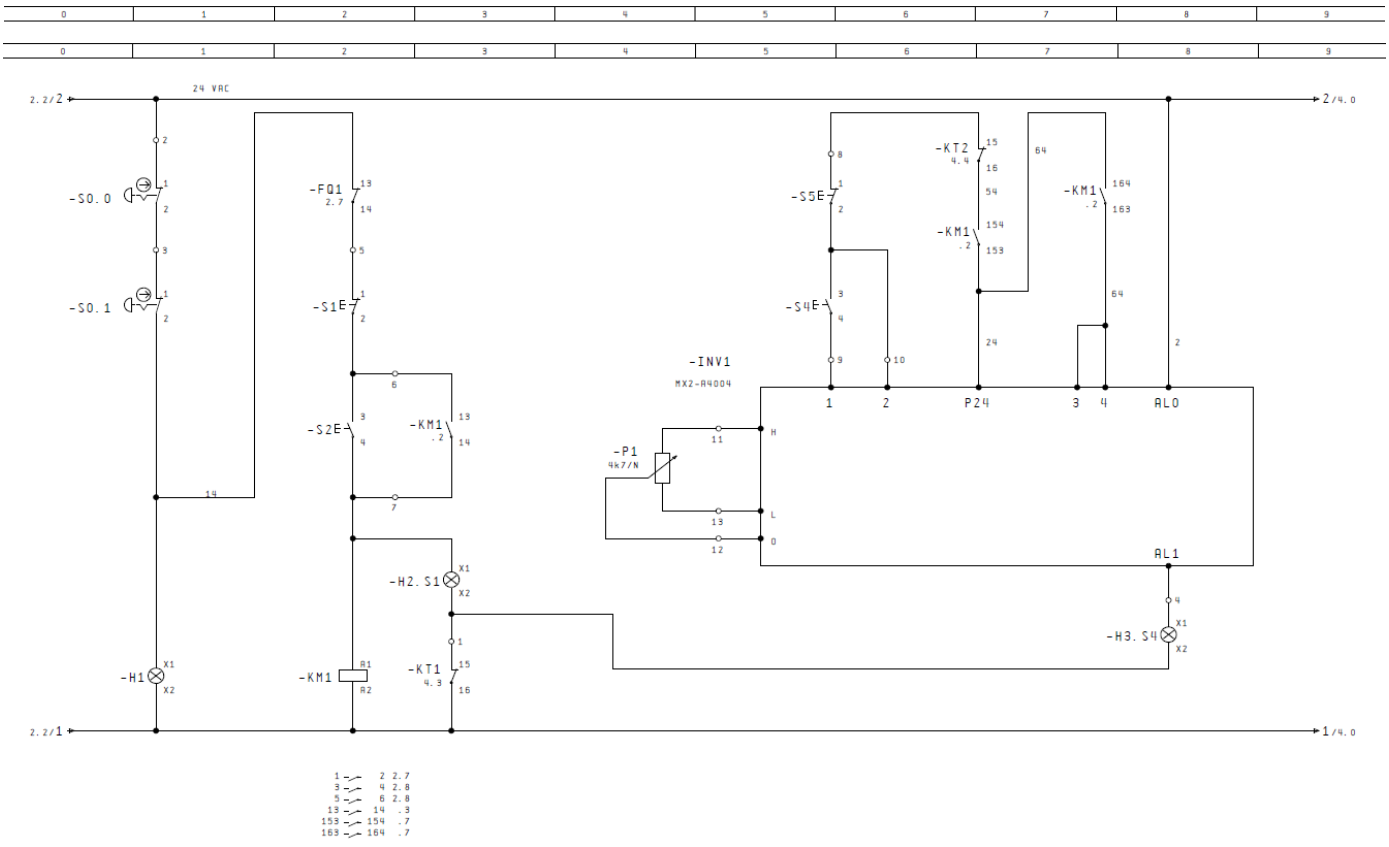

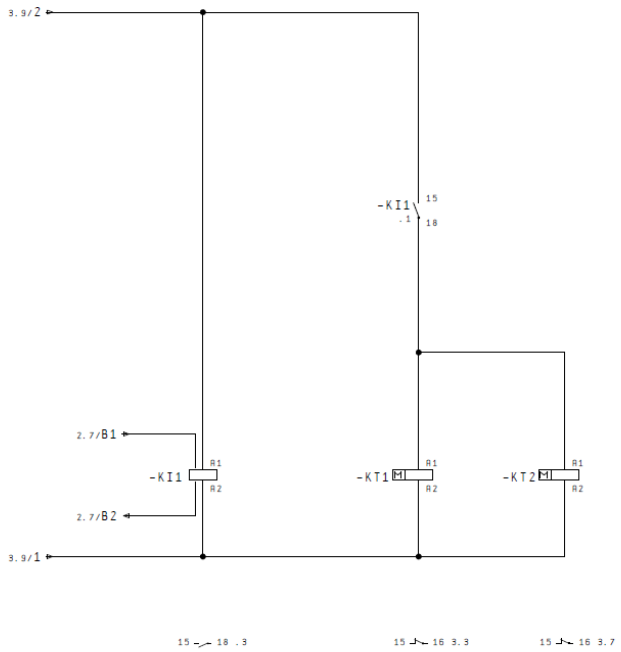
0
1
2
3
4
5
6
7
8
9
3.9/2
-KI1
15
.1
18
2.7/B1
-KI1
A1
A2
2.7/B2
-KT1
A1
A2
-KT2
A1
A2
3.9/1
15 18 .3
15 16 3.3
15 16 3.7

3

Exploded view and list of Spare parts

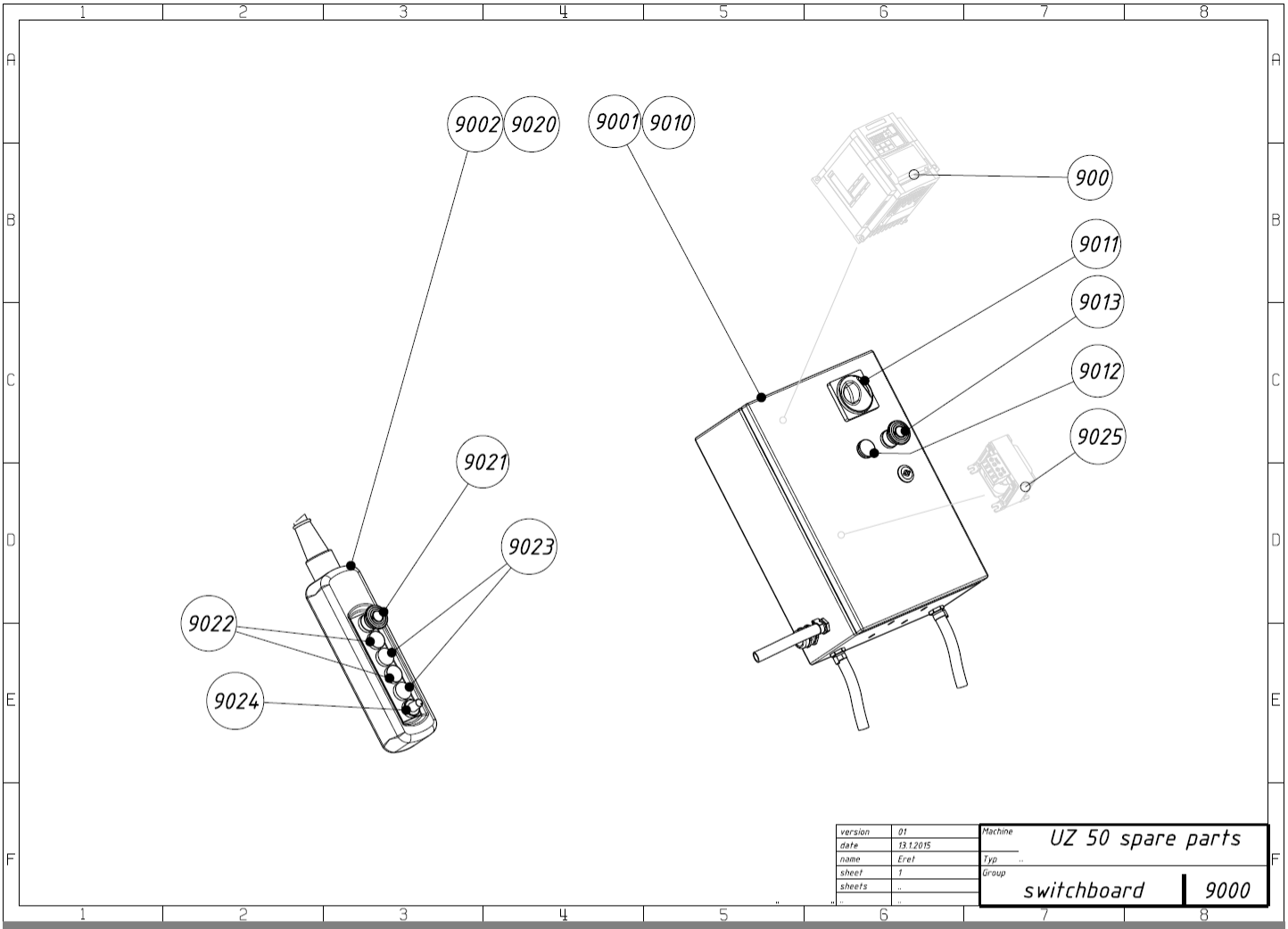

UZ50 SPARE PARTS drawing no. 9000 Switchboard

Number	Fig	Part name	Note	Pcs
1940.900A	***900***	inverter	*400/480V*	*1*
1940.900B	***900***	inverter	*3x220V*	*1*
1940.9001A	***9001***	electrocabinet (complete)	*400V*	*1*
1940.9001B	***9001***	electrocabinet (complete)	*480V*	*1*
1940.9001C	***9001***	electrocabinet (complete)	*3x220V*	*1*
1940.9002	***9002***	remote control (complete)		*1*
1940.9010	***9010***	electrocabinet (empty box)		*1*
1940.9011	***9011***	main switch		*1*
1940.9012	***9012***	pilot light		*1*
1940.9013	***9013***	stop switch		*1*
1940.9020	***9020***	remote control (empty)		*1*
1940.9021	***9021***	stop switch		*1*
1940.9022	***9022***	pilot light		*1*
1940.9023	***9023***	push button		*1*
1940.9024	***9024***	potentiometer		*1*
1940.9025A	***9025***	transformer	*400/24V 20VA*	*1*
1940.9025B	***9025***	transformer	*480/24V 20VA*	*1*
1940.9025C	***9025***	transformer	*220/24V 20VA*	*1*

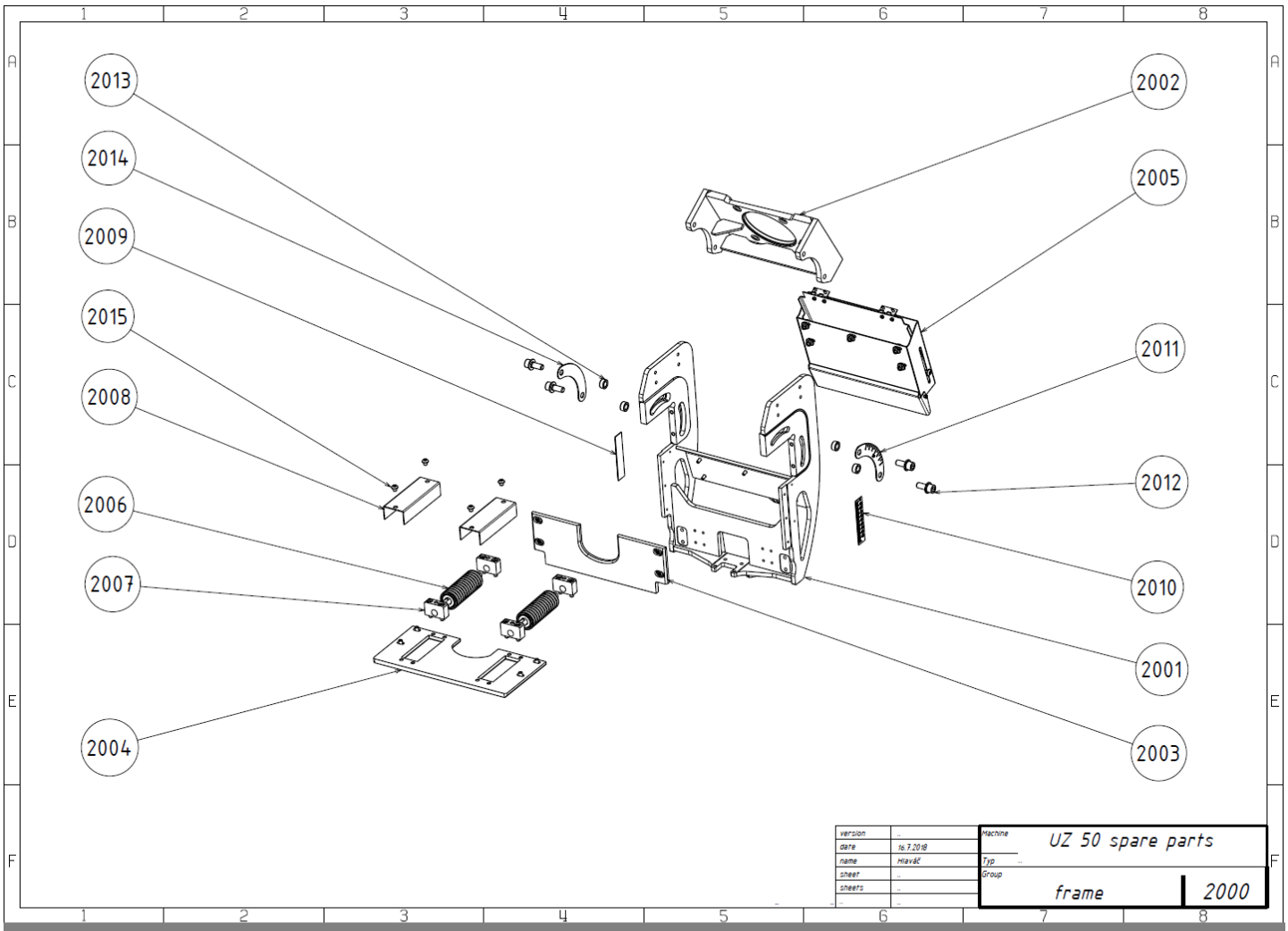

UZ50 SPARE PARTS

drawing no. 2000 Frame

Number	Fig	Part name	Note	Pcs
1940.2001	*2001*	frame		*1*
1940.2002	*2002*	folding bed		*1*
1940.2003	*2003*	vertical plate		*1*
1940.2004	*2004*	horizontal plate		*1*
1940.2005	*2005*	rectifier		*1*
1940.2006	*2006*	roller		*2*
1940.2007	*2007*	housing		*4*
1940.2008	*2008*	cover		*2*
1940.2009	*2009*	scale left		*1*
1940.2010	*2010*	scale right		*1*
1940.2011	*2011*	protractor right		*1*
1940.2012	*2012*	bolt with washer		*4*
1940.2013	*2013*	ring		*4*
1940.2014	*2014*	protractor left		*1*
1940.2015	*2015*	screw		*4*

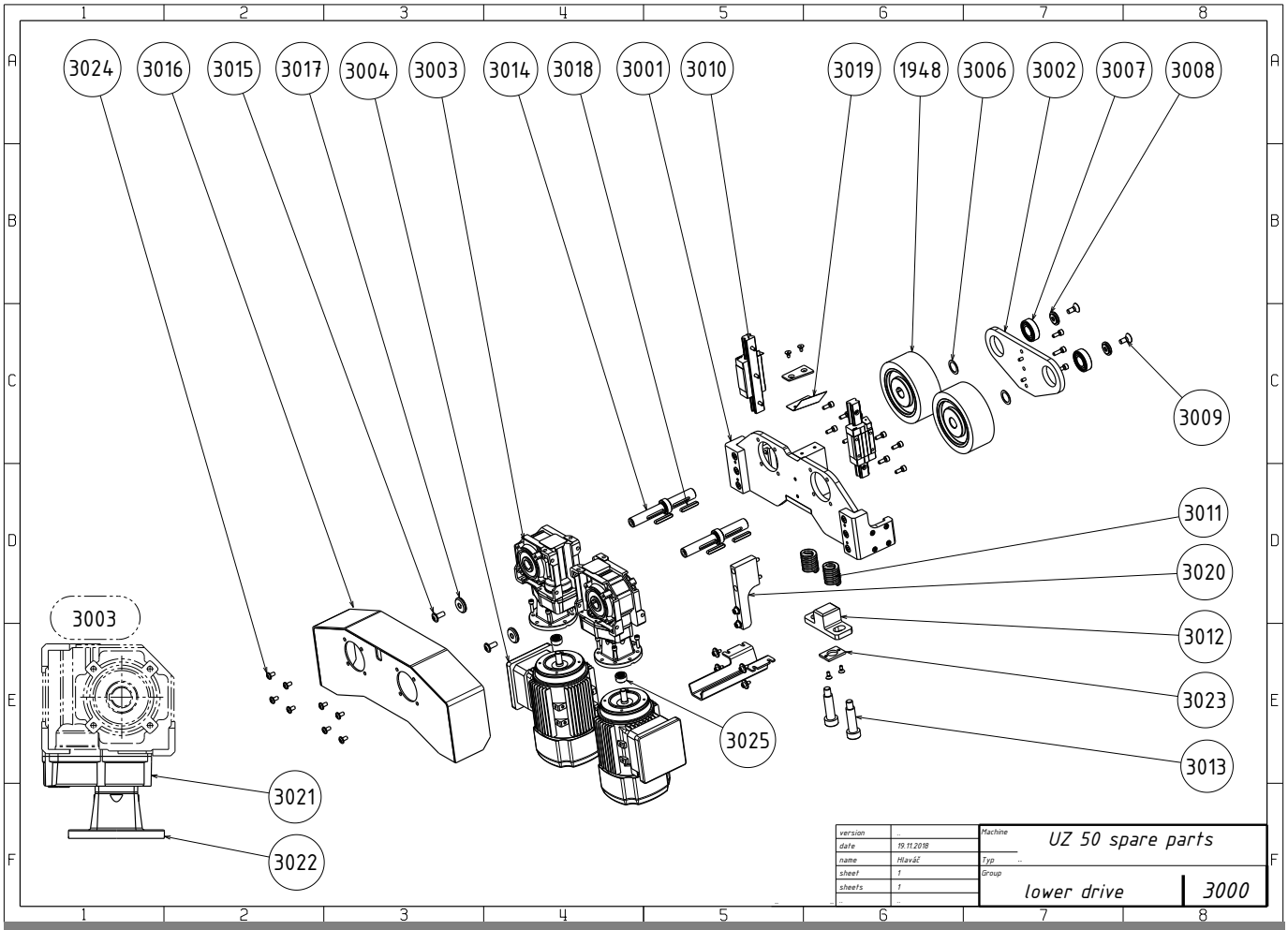

UZ50 SPARE PARTS drawing no. 3000 Lower Drive

Number	Fig	Part name	Note	Pcs
1948	***1948***	polyurethane wheel		*2*
1940.3001	***3001***	shoulder		*1*
1940.3002	***3002***	bearing plate		*1*
1940.3003	***3003***	gearbox		*2*
1940.3004	***3004***	electromotor		*2*
1940.3006	***3006***	washer		*2*
1940.3007	***3007***	ball-bearing		*2*
1940.3008	***3008***	washer		*2*
1940.3009	***3009***	screw		*2*
1940.3010	***3010***	linear quides		*2*
1940.3011	***3011***	compression spring		*2*
1940.3012	***3012***	stop		*1*
1940.3013	***3013***	screw		*2*
1940.3014	***3014***	shaft		*2*
1940.3015	***3015***	screw		*2*
1940.3016	***3016***	casing		*1*
1940.3017	***3017***	washer		*2*
1940.3018	***3018***	key		*4*
1940.3019	***3019***	wiper		*1*
1940.3020	***3020***	strut set		*1*
1940.3021	***3021***	HF flange		*1*
1940.3022	***3022***	neck		*1*
1940.3023	***3023***	plate		*1*
1940.3024	***3024***	screw		*8*
1940.3025	***3025***	shaft connector		*2*

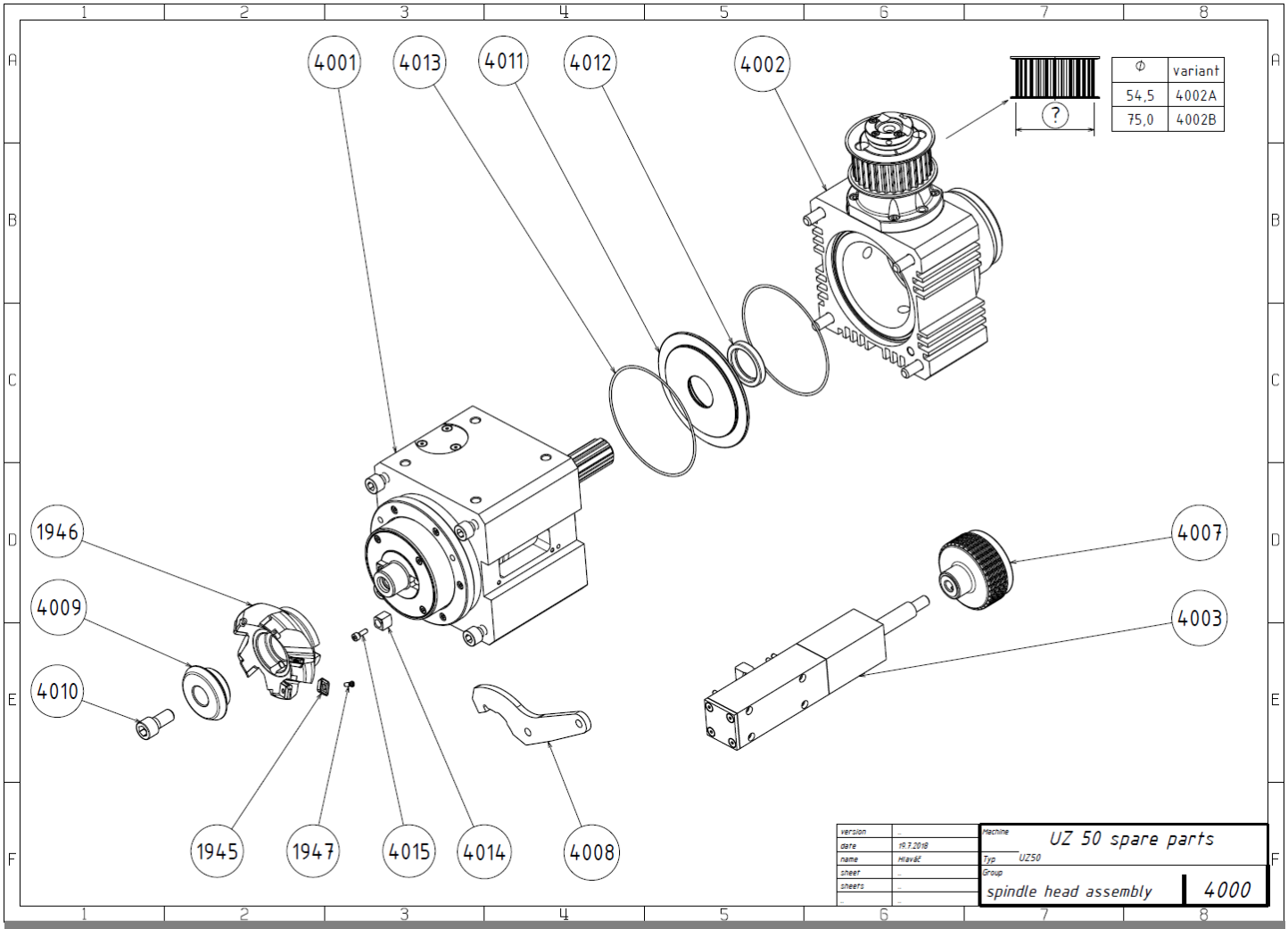

UZ50 SPARE PARTS

drawing no. **4000 Spindle Head Assembly**

Number	Fig	Part name	Note	Pcs
1945	***1945***	insert		*5*
1946	***1946***	milling head		*1*
1947	***1947***	screw		*5*
1940.4001	***4001***	headstock		*1*
1940.4002A	***4002***	gearbox assembly	*D54,5 mm*	*1*
1940.4002B	***4002***	gearbox assembly	*D75,0 mm*	*1*
1940.4003	***4003***	feedworks asembly		*1*
1940.4007	***4007***	revolution indicator		*1*
1940.4008	***4008***	key		*1*
1940.4009	***4009***	tool washer		*1*
1940.4010	***4010***	screw		*1*
1940.4011	***4011***	desk		*1*
1940.4012	***4012***	shaft seal		*1*
1940.4013	***4013***	oil seal ring		*2*
1940.4014	***4014***	key		*2*
1940.4015	***4015***	screw		*2*

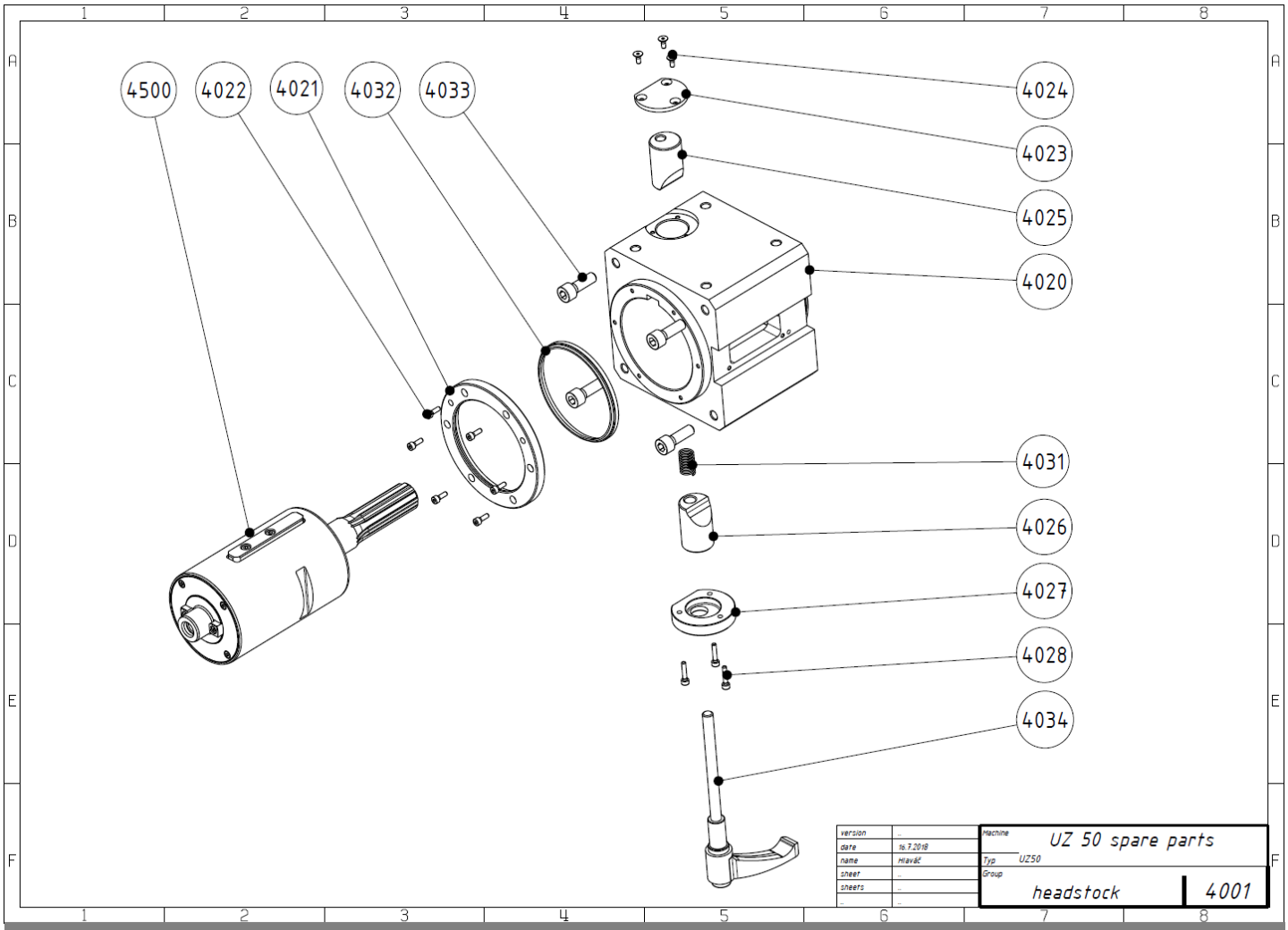

UZ50 SPARE PARTS drawing no. 4001 Headstock

Number	Fig	Part name	Note	Pcs
1940.4020	***4020***	body		*1*
1940.4021	***4021***	ring		*1*
1940.4022	***4022***	screw		*6*
1940.4023	***4023***	cover		*1*
1940.4024	***4024***	screw		*3*
1940.4025	***4025***	spindle brake		*1*
1940.4026	***4026***	spindle brake		*1*
1940.4027	***4027***	cover		*1*
1940.4028	***4028***	screw		*3*
1940.4031	***4031***	spring		*1*
1940.4032	***4032***	sealing ring		*1*
1940.4033	***4033***	screw		*4*
1940.4034	***4034***	lever		*1*
1940.4500	***4500***	spindle asembly		*1*

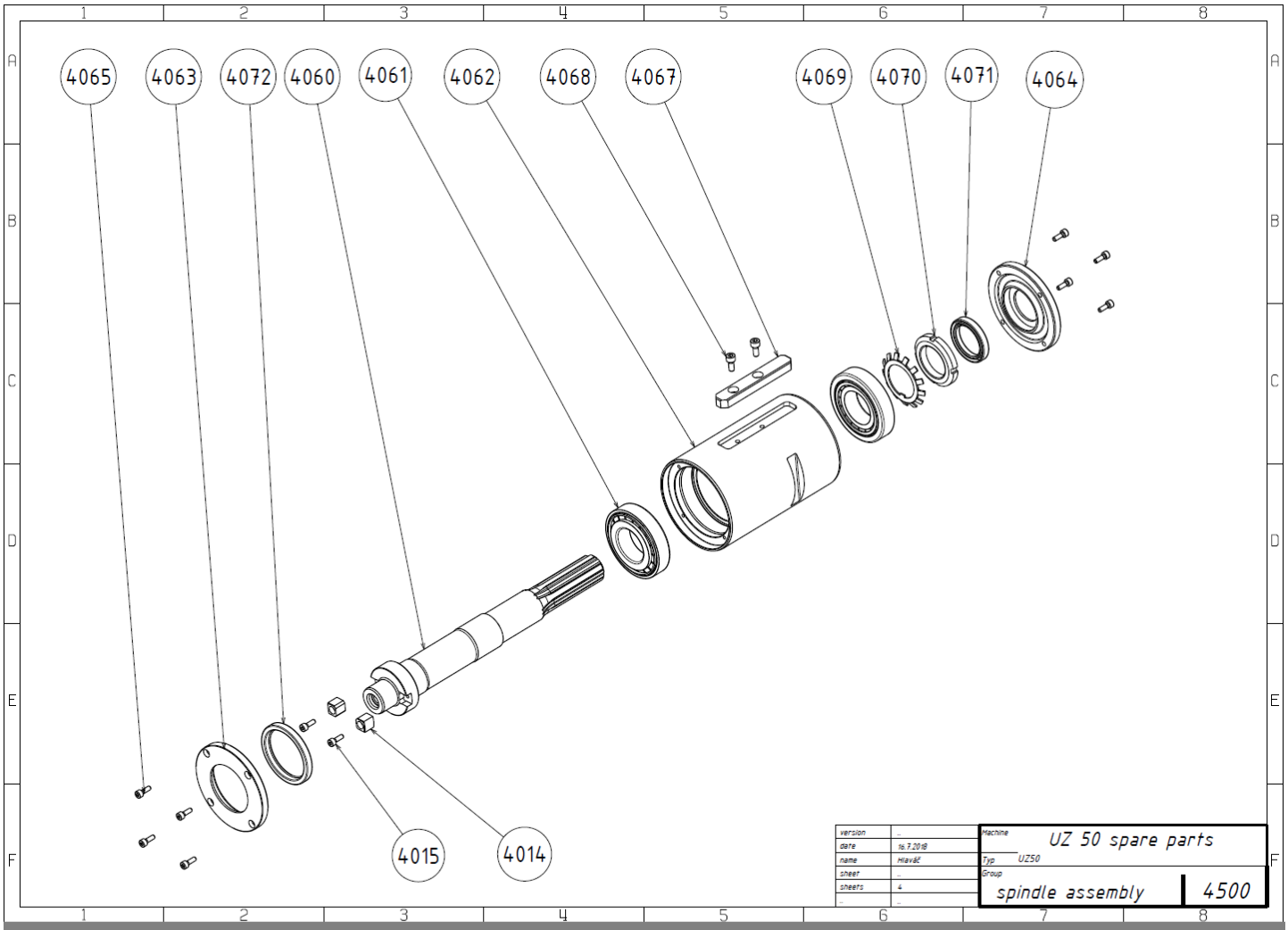

UZ50 SPARE PARTS drawing no. 4500 Spindle Assembly

Number	Fig	Part name	Note	Pcs
1940.4014	*4014*	key		*2*
1940.4015	*4015*	screw		*2*
1940.4060	*4060*	shaft		*1*
1940.4061	*4061*	conical bearing		*2*
1940.4062	*4062*	body		*1*
1940.4063	*4063*	front cover		*1*
1940.4064	*4064*	rear cover		*1*
1940.4065	*4065*	screw		*8*
1940.4067	*4067*	key		*1*
1940.4068	*4068*	screw		*2*
1940.4069	*4069*	washer		*1*
1940.4070	*4070*	nut		*1*
1940.4071	*4071*	shaft sealing ring		*1*
1940.4072	*4072*	shaft sealing ring		*1*

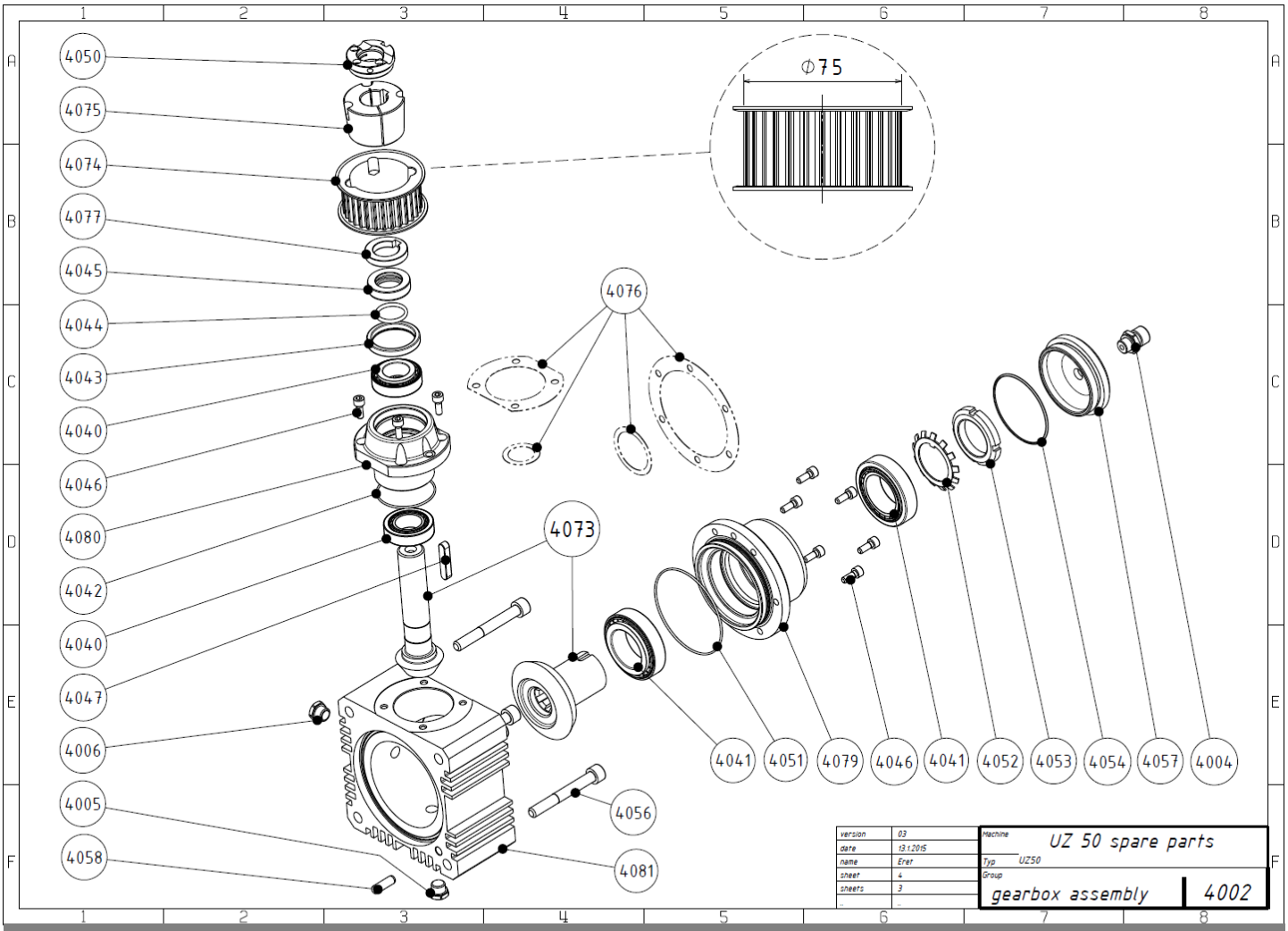

UZ50 SPARE PARTS

drawing no. 4002 Gearbox Assembly

Number	Fig	Part name	Note	Pcs
1940.4004	*4004*	air-outlet valve		*1*
1940.4005	*4005*	gearbox drain plug		*1*
1940.4006	*4006*	liquid-level gauge		*1*
1940.4040	*4040*	conical bearing		*2*
1940.4041	*4041*	conical bearing		*2*
1940.4042	*4042*	shaft sealing ring		*1*
1940.4043	*4043*	shaft sealing ring		*1*
1940.4044	*4044*	shaft sealing ring		*1*
1940.4045	*4045*	ring		*1*
1940.4046	*4046*	screw		*8*
1940.4047	*4047*	slip tonque		*1*
1940.4050	*4050*	nut		*1*
1940.4051	*4051*	shaft sealing ring		*1*
1940.4052	*4052*	washer		*1*
1940.4053	*4053*	nut		*1*
1940.4054	*4054*	shaft sealing ring		*1*
1940.4056	*4056*	screw		*4*
1940.4057	*4057*	cover		*1*
1940.4058	*4058*	pin		*1*
1940.4073	*4073*	gearing		*1*
1940.4074	*4074*	pulley TaperLock	*D75 mm*	*1*
1940.4075	*4075*	taper		*1*
1940.4076	*4076*	washer kit	*For adjustment of the correct gap between gears. Necessary for replacing of gears.*	*1*
1940.4077	*4077*	washer		*1*
1940.4079	*4079*	pinion bearing house I		*1*
1940.4080	*4080*	pinion bearing house II		*1*
1940.4081	*4081*	bearing house		*1*
1940.OLEJ	*4078*	oil 1L		*1*

! Older version of the pinion assembly. Check the diameter of the pulley fig. 4048 - Ø 54,5mm

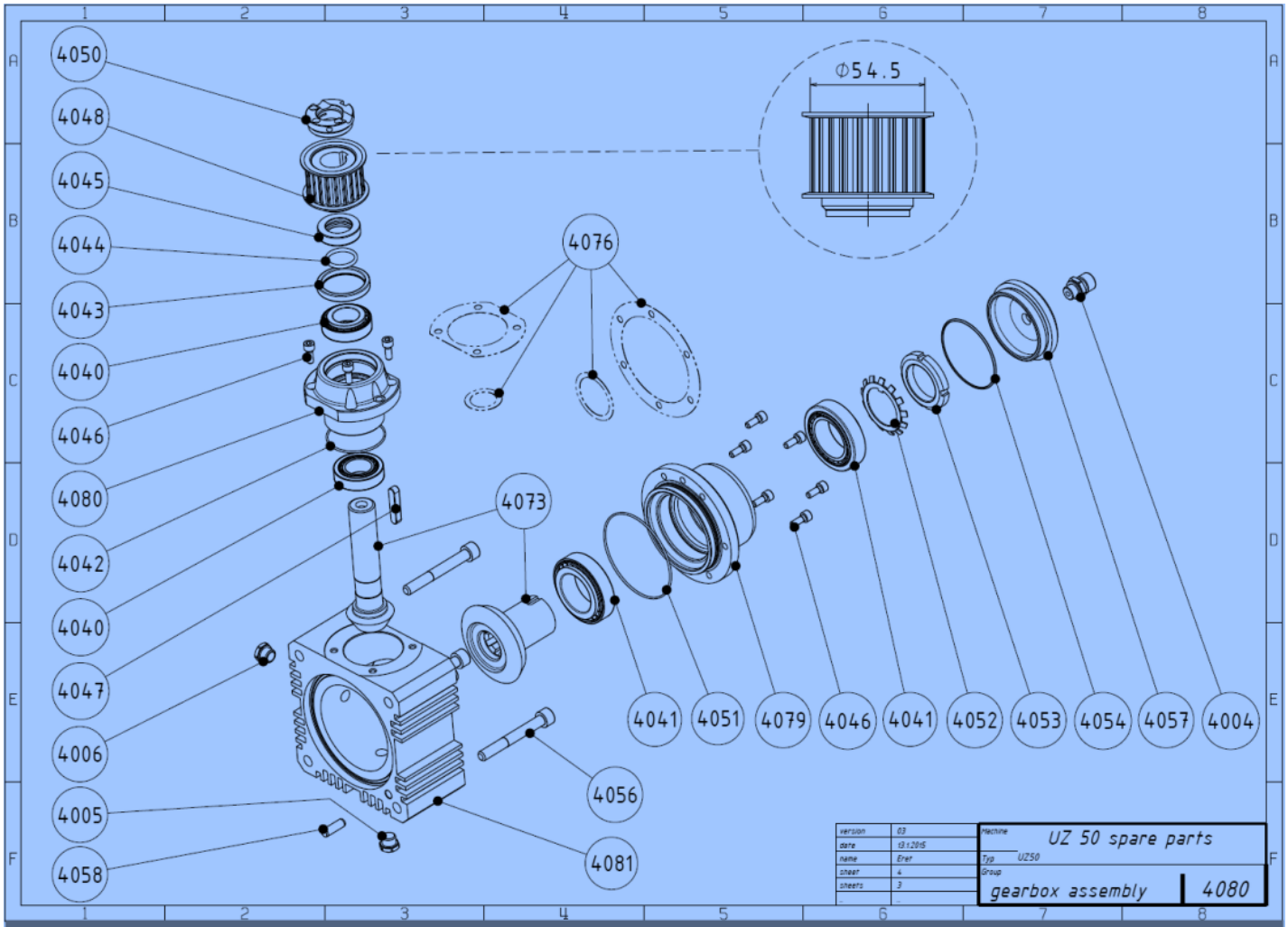

UZ50 SPARE PARTS

drawing no. **4080 Gearbox Assembly**

Number	Fig	Part name	Note	Pcs
1940.4004	*4004*	air-outlet valve		*1*
1940.4005	*4005*	gearbox drain plug		*1*
1940.4006	*4006*	liquid-level gauge		*1*
1940.4040	*4040*	conical bearing		*2*
1940.4041	*4041*	conical bearing		*2*
1940.4042	*4042*	shaft sealing ring		*1*
1940.4043	*4043*	shaft sealing ring		*1*
1940.4044	*4044*	shaft sealing ring		*1*
1940.4045	*4045*	ring		*1*
1940.4046	*4046*	screw		*8*
1940.4047	*4047*	slip tonque		*1*
1940.4048	*4048*	pulley	*D54,5 mm*	*1*
1940.4050	*4050*	nut		*1*
1940.4051	*4051*	shaft sealing ring		*1*
1940.4052	*4052*	washer		*1*
1940.4053	*4053*	nut		*1*
1940.4054	*4054*	shaft sealing ring		*1*
1940.4056	*4056*	screw		*4*
1940.4057	*4057*	cover		*1*
1940.4058	*4058*	pin		*1*
1940.4073	*4073*	gearing		*1*
1940.4076	*4076*	washer kit	*For adjustment of the correct gap between gears. Necessary for replacing of gears.*	*1*
1940.4079	*4079*	pinion bearing house I		*1*
1940.4080	*4080*	pinion bearing house II		*1*
1940.4081	*4081*	bearing house		*1*
1940.OLEJ	*4078*	oil 1L		*1*

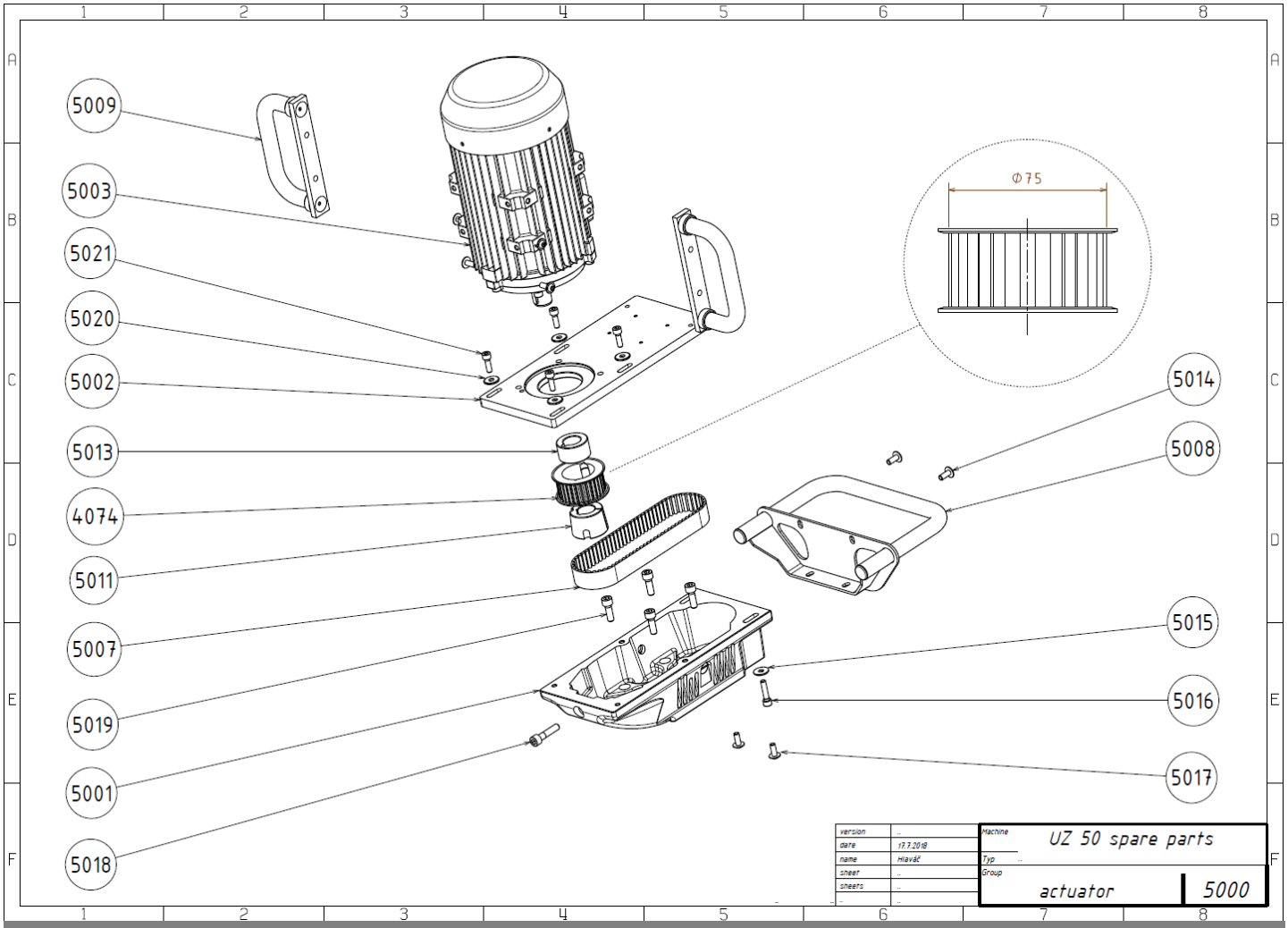

UZ50 SPARE PARTS

drawing no. 5000 Actuator

Number	Fig	Part name	Note	Pcs
1940.4074	***4074***	pulley TaperLock	*D75 mm*	*1*
1940.5001	***5001***	body		*1*
1940.5002	***5002***	plate		*1*
1940.5003A	***5003***	electromotor	*400V/50Hz, 480V/60Hz*	*1*
1940.5003B	***5003***	electromotor	*3x220V/60Hz*	*1*
1940.5007T	***5007***	transmision belt Taper	*pulley D75 mm*	*1*
1940.5008	***5008***	handle		*1*
1940.5009	***5009***	handle		*2*
1940.5011	***5011***	taper		*1*
1940.5013	***5013***	washer		*1*
1940.5014	***5014***	screw		*2*
1940.5015	***5015***	washer		*1*
1940.5016	***5016***	screw		*1*
1940.5017	***5017***	screw		*2*
1940.5018	***5018***	screw		*1*
1940.5019	***5019***	screw		*4*
1940.5020	***5020***	washer		*4*
1940.5021	***5021***	screw		*4*

! Older version of the pulley assembly. Check the diameter of the pulley. 5005 - Ø 54,5mm

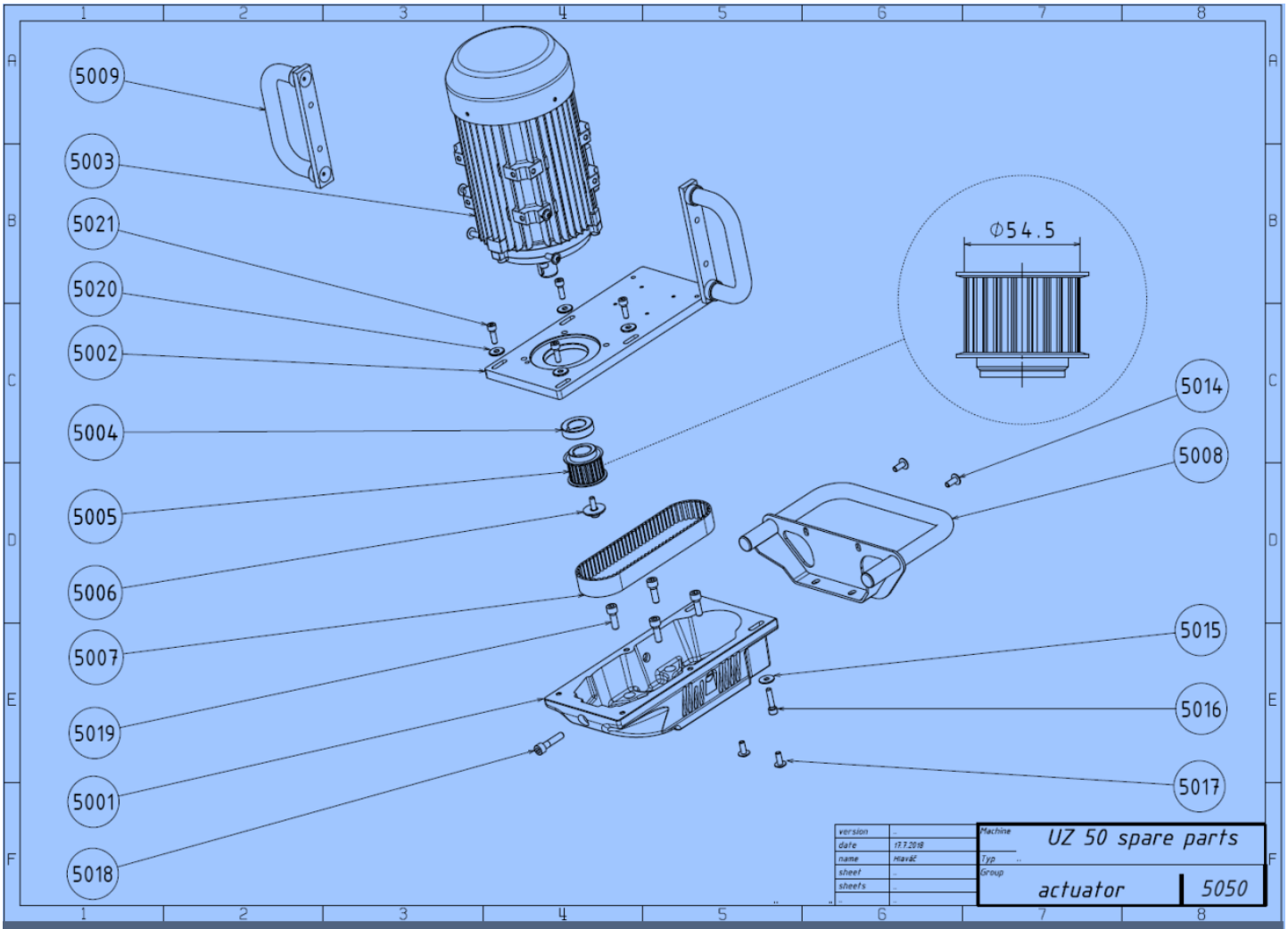

UZ50 SPARE PARTS drawing no. 5050 Actuator

Number	Fig	Part name	Note	Pcs
1940.5001	*5001*	body		*1*
1940.5002	*5002*	plate		*1*
1940.5003A	*5003*	electromotor	*400V/50Hz, 480V/60Hz*	*1*
1940.5003B	*5003*	electromotor	*3x220V/60Hz*	*1*
1940.5004	*5004*	washer		*1*
1940.5005	*5005*	pulley	*D54,5 mm*	*1*
1940.5006	*5006*	bolt with washer		*1*
1940.5007G	*5007*	transmision belt Gold	*pulley D54,5 mm*	*1*
1940.5007P	*5007*	transmision belt Platinum	*pulley D54,5 mm*	*1*
1940.5008	*5008*	handle		*1*
1940.5009	*5009*	handle		*2*
1940.5014	*5014*	screw		*2*
1940.5015	*5015*	washer		*1*
1940.5016	*5016*	screw		*1*
1940.5017	*5017*	screw		*2*
1940.5018	*5018*	screw		*1*
1940.5019	*5019*	screw		*4*
1940.5020	*5020*	washer		*4*
1940.5021	*5021*	screw		*4*

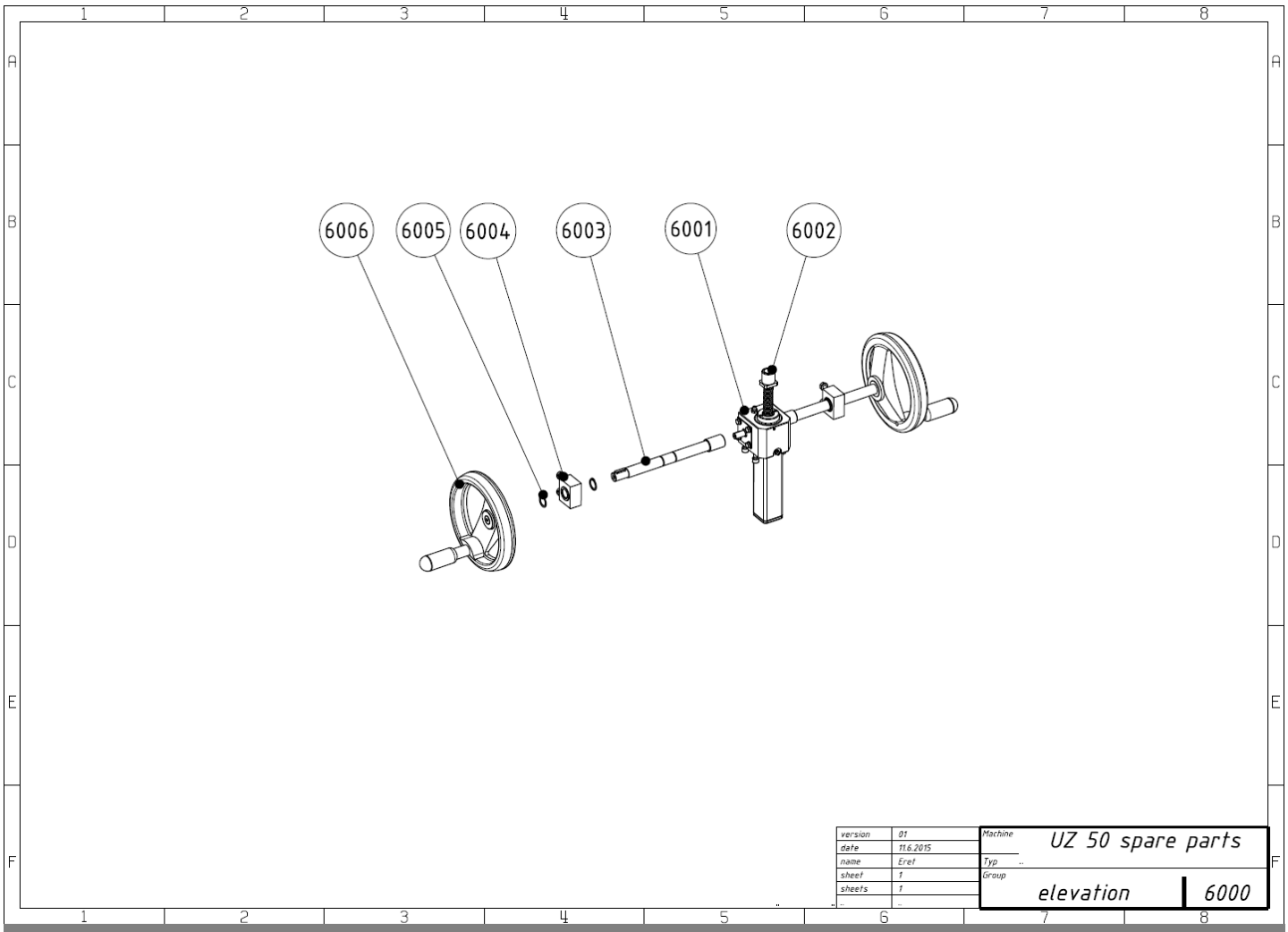

UZ50 SPARE PARTS

drawing no. 6000 Elevation

Number	Fig	Part name	Note	Pcs
1940.6001	*6001*	gearbox complete		*1*
1940.6002	*6002*	screw		*1*
1940.6003	*6003*	arbor		*2*
1940.6004	*6004*	bearing housing		*2*
1940.6005	*6005*	locking ring		*2*
1940.6006	*6006*	wheel		*2*

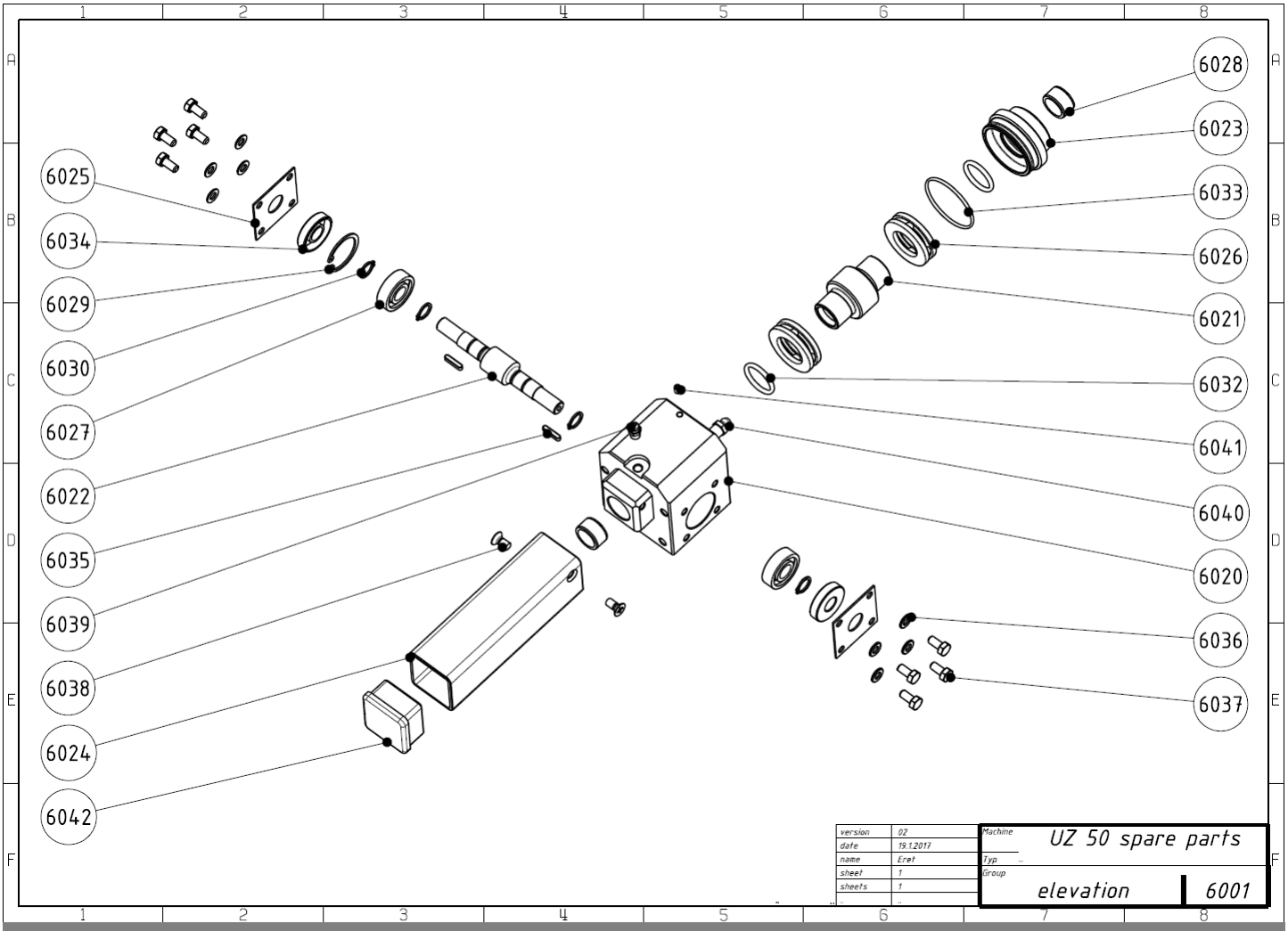

UZ50 SPARE PARTS

drawing no. 6001 Gearbox Elevation

Number	Fig	Part name	Note	Pcs
1940.6020	*6020*	body		*1*
1940.6021	*6021*	worm gear		*1*
1940.6022	*6022*	spiral worm		*1*
1940.6023	*6023*	plug		*1*
1940.6024	*6024*	case		*1*
1940.6025	*6025*	plate		*2*
1940.6026	*6026*	axial bearing		*2*
1940.6027	*6027*	radial bearing		*2*
1940.6028	*6028*	sleeve bearing		*2*
1940.6029	*6029*	lock ring		*1*
1940.6030	*6030*	lock ring		*4*
1940.6032	*6032*	O-ring seal		*2*
1940.6033	*6033*	O-ring seal		*1*
1940.6034	*6034*	sealing ring		*2*
1940.6035	*6035*	key		*2*
1940.6036	*6036*	washer		*8*
1940.6037	*6037*	screw		*8*
1940.6038	*6038*	screw		*2*
1940.6039	*6039*	grease nipple		*1*
1940.6040	*6040*	grease nipple		*1*
1940.6041	*6041*	set screw		*1*
1940.6042	*6042*	cover		*1*

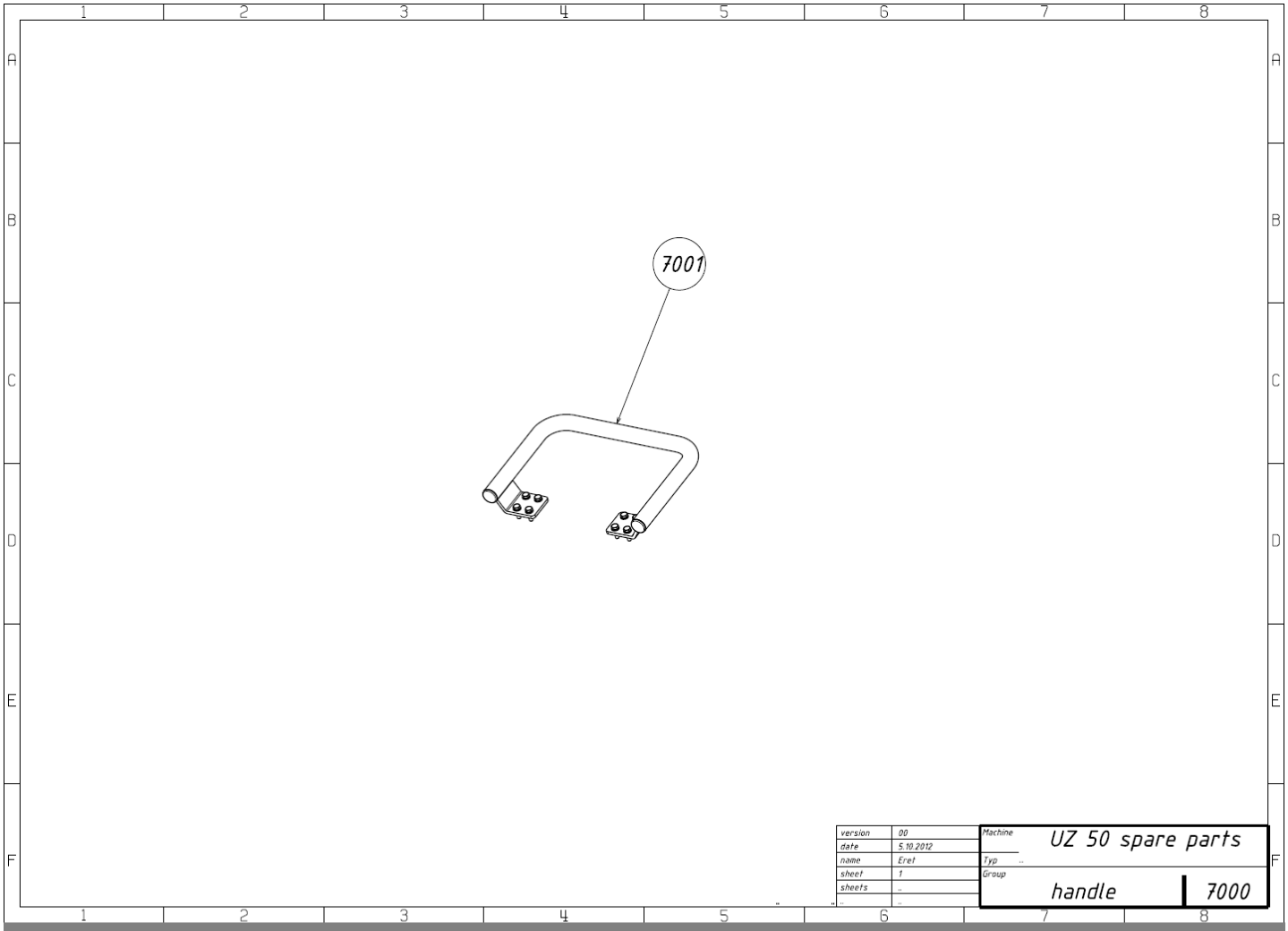

UZ50 SPARE PARTS drawing no. 7000 Handle

Number	Fig	Part name	Note	Pcs
1940.7001	*7001*	handle		*1*

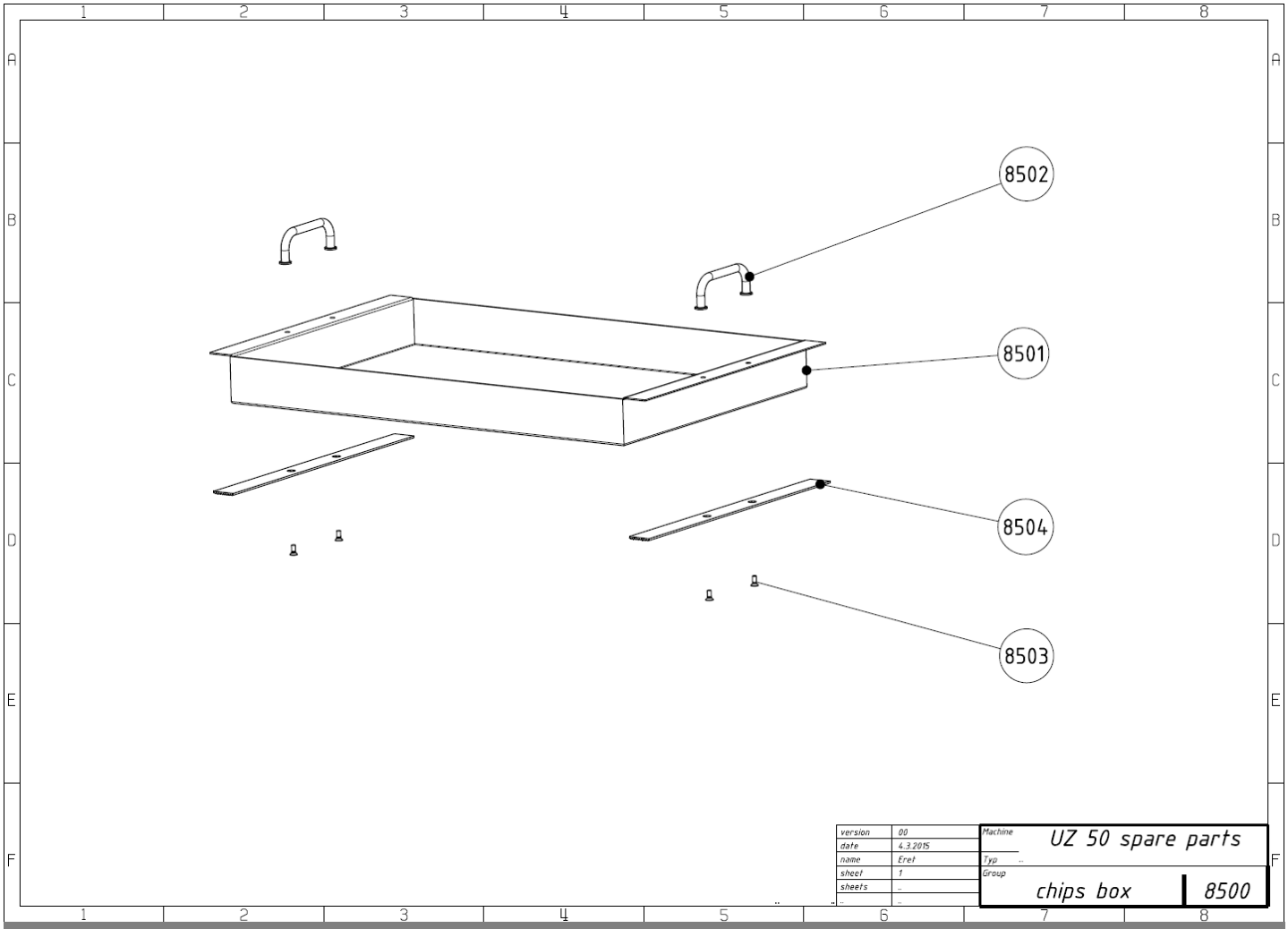

UZ50 SPARE PARTS drawing no. 8500 Chips Box

Number	Fig	Part name	Note	Pcs
1940.8501	*8501*	box		*1*
1940.8502	*8502*	grip		*2*
1940.8503	*8503*	screw		*4*
1940.8504	*8504*	rubber strap		*2*

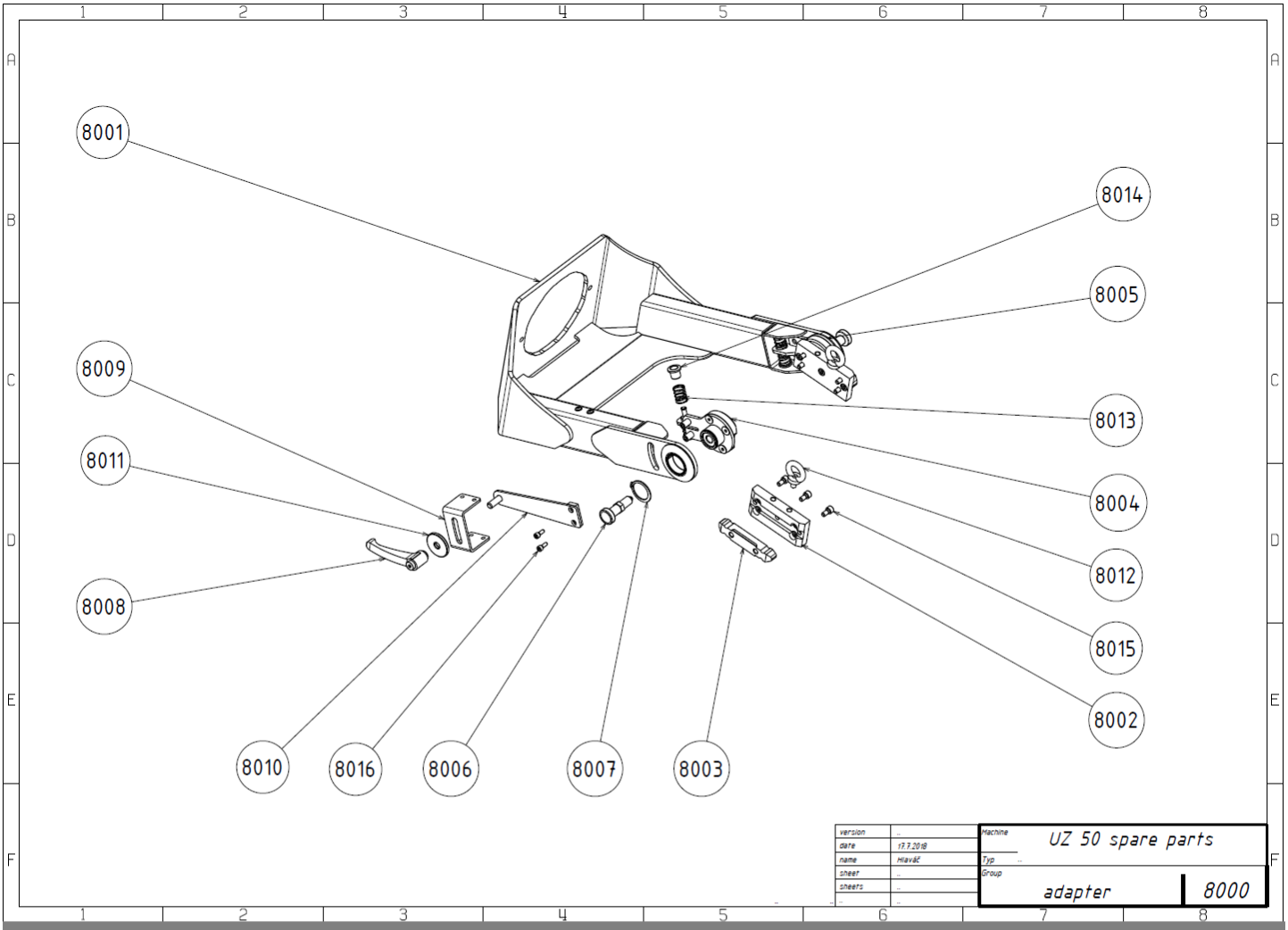

UZ50 SPARE PARTS

drawing no. 8000 Adapter

Number	Fig	Part name	Note	Pcs
1940.8001	*8001*	frame		*1*
1940.8002	*8002*	block		*2*
1940.8003	*8003*	key		*2*
1940.8004	*8004*	catcher left		*1*
1940.8005	*8005*	catcher right		*1*
1940.8006	*8006*	locking pin		*2*
1940.8007	*8007*	lock ring		*2*
1940.8008	*8008*	grip		*1*
1940.8009	*8009*	holder		*1*
1940.8010	*8010*	lever		*1*
1940.8011	*8011*	washer		*1*
1940.8012	*8012*	lifting eye to		*2*
1940.8013	*8013*	spring		*4*
1940.8014	*8014*	stop		*4*
1940.8015	*8015*	screw		*3*
1940.8016	*8016*	screw		*2*

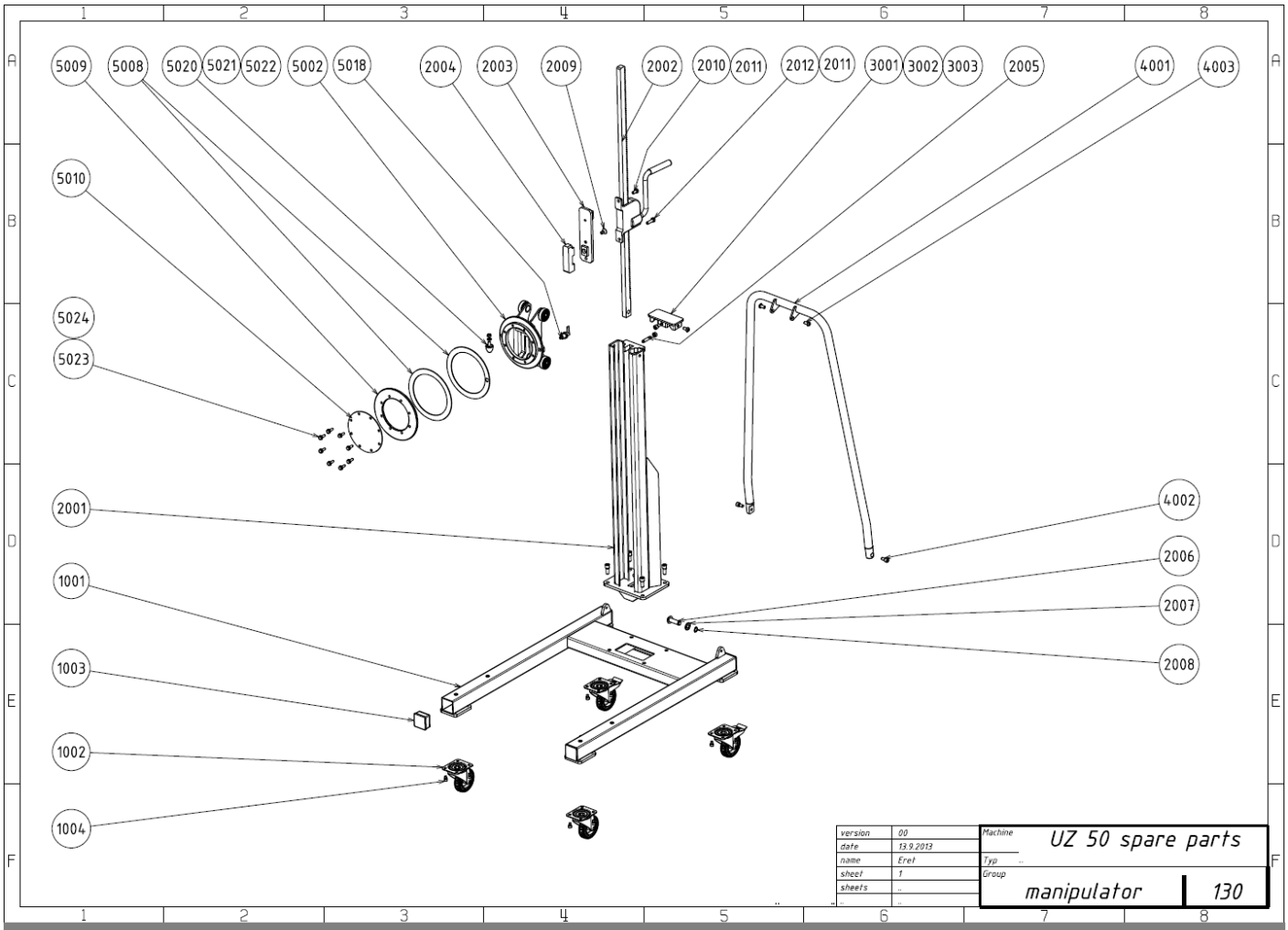

UZ50 SPARE PARTS

drawing no. 130 Manipulator

Number	Fig	Part name	Pcs	Number	Fig	Part name	Pcs
1930.1001	*1001*	frame	*1*	1930.5023	*5023*	screw	*8*
1930.1002	*1002*	wheel	*4*	1930.5024	*5024*	washer	*8*
1930.1003	*1003*	cover	*4*				
1930.1004	*1004*	screw	*4*				
1930.2001	*2001*	tower	*1*				
1930.2002	*2002*	elevator	*1*				
1930.2003	*2003*	adapter	*1*				
1930.2004	*2004*	backstop	*1*				
1930.2005	*2005*	adjusting screw	*1*				
1930.2006	*2006*	pin	*1*				
1930.2007	*2007*	washer	*2*				
1930.2008	*2008*	lock ring	*2*				
1930.2009	*2009*	screw	*1*				
1930.2010	*2010*	screw	*1*				
1930.2011	*2011*	washer	*2*				
1930.2012	*2012*	screw	*1*				
1930.3001	*3001*	cap	*1*				
1930.3002	*3002*	screw	*2*				
1930.3003	*3003*	screw	*1*				
1930.4001	*4001*	hand rail	*1*				
1930.4002	*4002*	screw	*2*				
1930.4003	*4003*	screw	*2*				
1930.5002	*5002*	cart	*1*				
1930.5008	*5008*	ring	*2*				
1930.5009	*5009*	flange	*1*				
1930.5010	*5010*	cover	*1*				
1930.5018	*5018*	safety pin	*1*				
1930.5020	*5020*	rubber damper	*1*				
1930.5021	*5021*	nut	*1*				
1930.5022	*5022*	washer	*1*				

Description of the electro cabinet UZ50

List of the components and Order numbers

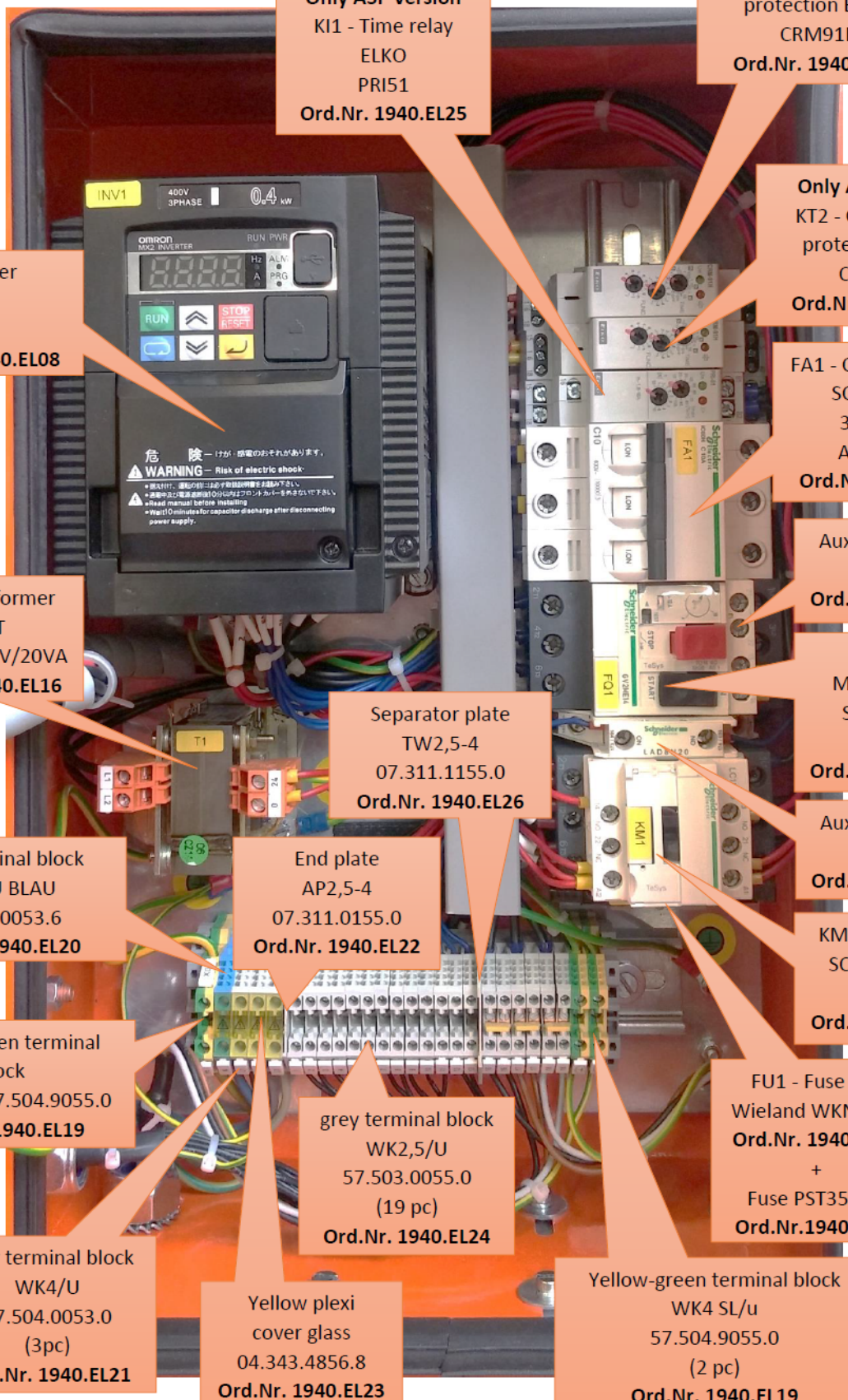

Only ASP version
KI1 - Time relay
ELKO
PRI51
Ord.Nr. 1940.EL25

Only ASP version
KT1 - Overvoltage protection ELKO
CRM91H
Ord.Nr. 1940.EL27

Only ASP version
KT2 - Overvoltage protection ELKO
CRM91H
Ord.Nr. 1940.EL27

INV1 - Inverter
OMRON
MX2-A4004
Ord.Nr. 1940.EL08

FA1 - Circuit Breaker
SCHNEIDER
3P/10A/C
A9F07310
Ord.Nr. 1940.EL07

Auxiliary contact
GVAE11
Ord.Nr. 1940.EL06

T1 – Transformer
ELZAT
JT20 400/24V/20VA
Ord.Nr. 1940.EL16

FQ1
Motor starter
SCHNEIDER
GV2ME14
Ord.Nr. 1940.EL05

Separator plate
TW2,5-4
07.311.1155.0
Ord.Nr. 1940.EL26

Auxiliary contact
LAD8N20
Ord.Nr. 1940.EL04

Blue terminal block
WK4/U BLAU
57.504.0053.6
Ord.Nr. 1940.EL20

End plate
AP2,5-4
07.311.0155.0
Ord.Nr. 1940.EL22

KM1 – Contactor
SCHNEIDER 9A
LC1D09B7
Ord.Nr. 1940.EL03

Yellow-green terminal block
WK4 SL/u 57.504.9055.0
Ord.Nr. 1940.EL19

FU1 - Fuse clip
Wieland WKN35/U
Ord.Nr. 1940.EL17
+
Fuse PST35A1A
Ord.Nr.1940.EL18

grey terminal block
WK2,5/U
57.503.0055.0
(19 pc)
Ord.Nr. 1940.EL24

grey terminal block
WK4/U
57.504.0053.0
(3pc)
Ord.Nr. 1940.EL21

Yellow plexi
cover glass
04.343.4856.8
Ord.Nr. 1940.EL23

Yellow-green terminal block
WK4 SL/u
57.504.9055.0
(2 pc)
Ord.Nr. 1940.EL19

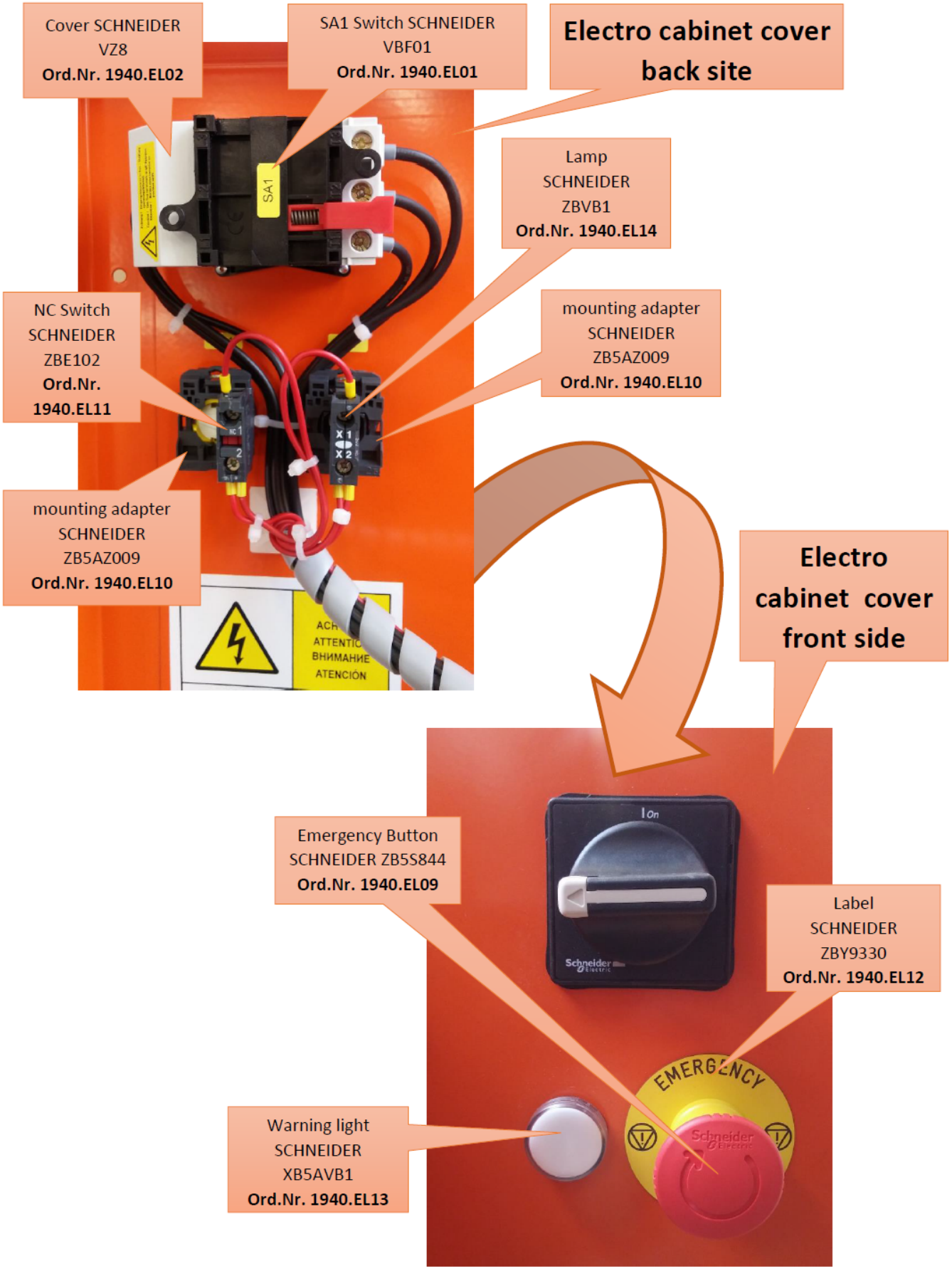
Cover SCHNEIDER VZ8 Ord.Nr. 1940.EL02
SA1 Switch SCHNEIDER VBF01 Ord.Nr. 1940.EL01
Electro cabinet cover back site
Lamp SCHNEIDER ZBVB1 Ord.Nr. 1940.EL14
NC Switch SCHNEIDER ZBE102 Ord.Nr. 1940.EL11
mounting adapter SCHNEIDER ZB5AZ009 Ord.Nr. 1940.EL10
mounting adapter SCHNEIDER ZB5AZ009 Ord.Nr. 1940.EL10
SA1
Electro cabinet cover front side
Emergency Button SCHNEIDER ZB5S844 Ord.Nr. 1940.EL09
Label SCHNEIDER ZBY9330 Ord.Nr. 1940.EL12
Warning light SCHNEIDER XB5AVB1 Ord.Nr. 1940.EL13
On
EMERGENCY

Nr. of the part	Name	Nr. of the drawing	Recommended number of the spare parts pc/year	probability factor (on scale 1-5)	note
1945	inserts	4000	Depends on the using (one set 5pc)	5	NKO Machines delivers these inserts in the plastic box of 10pc. Depends on the using and the type of the material
1946	milling head	4000	1pc	2	Depends on the skills of the staff
1947	screw for the insert	4000	5pc	3	Depends on the care of the machine.
1940.5007... **Version G, T or P**	belt	5000 and 5050	5pc	4	Depends on the using and the type of the materiál **There are 3 types of the belt. Look to the drawing for correct type**
1948	feeding wheels	3000	2pc (one set 2pc)	3	Depends on the care of the machine. (Possibility of the recovery of the polyurethane surface)
1940.2006	roller	2000	2pc	1	Depends on the using and the type of the material
1940.2003	guide plate vertical	2000	1pc	3	Depends on the using and the type of the material
1940.3016	casing	3000	1pc	1	Risk of mechanical damage
1940.3019	Wiper	3000	2pc	4	Depends on the using and the type of the material
1940.4014	key	4000	2pc (one set)	1	Depends on the skills of the staff
1940.4002... **Version A or B**	gearbox	4000	1pc	2	Depends on the skills of the staff. **There are 2 types of the belt. Look to the drawing for correct type**
1940.4007	scale wheel	4000	1pc	1	Depends of using, Risk of mechanical damage
1940.4003	setting shaft	4000	1pc	1	Depends of using, Risk of mechanical damage
1940.4013	O-ring	4000	2pc	3	Risk of mechanical damage
1940.6002	lift screw	6000	1pc	3	Depends on the skills of the staff
1940.9022	button	9000	1pc	2	Depends on the skills of the staff
1940.9023	button	9000	1pc	2	Depends on the skills of the staff
1940.9024	setting knob	9000	1pc	3	Depends on the skills of the staff
1930.1002	wheel	130	4pc	4	Risk of mechanical damage
1940.900... **Version A or B**	Inverter	9000	1pc	2	Depends on the stability of the local electric network **There are 2 types of the inverter. Look to the drawing for correct type**
1940.olej	Oil 1L.	---	1L	5	Period for exchange of the oil in operation manual

We recommend you, to keep these spare parts on your stock for providing of the high standard service.
Compare the spare parts with the operation manual.

Link for our video manuals and etc:
http://www.youtube.com/user/firmanko/videos?shelf_index=0&view=0&sort=dd

A copy of this manual is delivered with every machine UZ50.
All rights reserved.
No part of this publication can be reproduced without the prior consent granted by the N.KO company.

Manufacturer's and Distributor's Address:

N.KO spol. s r.o.

a Member of Richtr Group

Táborská 398/22

293 01 Mladá Boleslav

Czech Republic – Europe Union

Phone: +420 326 772 001 fax: +420 326 774 279

email:nko@nko.cz

USA Distributor's Address:

BEVELER USA INC.

a Member of Richtr Group

Business Office, Workshop, Warehouse

328 14th Street

Ambridge, PA 15003

Toll Free Number: 1-800-973-1138
Phone Ambridge (PA) office: 1-412-452-2563

email:service@bevelerusa.com